NORTH BLOOMFIELD COMMERCE CENTER
INLAND WETLANDS AND WATERCOURSES COMMISSION PERMIT APPLICATION
116 WEST DUDLEY TOWN ROAD
MAP NO. 16, LOT 43
TOWN OF BLOOMFIELD, HARTFORD COUNTY, CONNECTICUT

CIVIL DRAWING INDEX

SHEET NUMBER	DRAWING TITLE	DATE	LAST REVISED
CS001	SITE COVER SHEET	12/08/2022	–
VL101	ALTA/NSPS LAND TITLE SURVEY (BOUNDARY SURVEY)	10/11/2022	–
VL102–VL105	ALTA/NSPS LAND TITLE SURVEY (TOPOGRAPHIC SURVEY)	10/11/2022	–
CS002	MASTER LEGEND & NOTES	12/08/2022	–
CS100	OVERALL SITE PLAN	12/08/2022	–
CS101	SITE PLAN I	12/08/2022	–
CS102	SITE PLAN II	12/08/2022	–
CS103	SITE PLAN III	12/08/2022	–
CS104	SITE PLAN IV	12/08/2022	–
CS105	SITE PLAN V	12/08/2022	–
CS501	SITE DETAILS I	12/08/2022	–
CS502	SITE DETAILS II	12/08/2022	–
CS503	SITE DETAILS III	12/08/2022	–
CG100	OVERALL GRADING & DRAINAGE PLAN	12/08/2022	–
CG101	GRADING & DRAINAGE PLAN I	12/08/2022	–
CG102	GRADING & DRAINAGE PLAN II	12/08/2022	–
CG103	GRADING & DRAINAGE PLAN III	12/08/2022	–
CG104	GRADING & DRAINAGE PLAN IV	12/08/2022	–
CG105	GRADING & DRAINAGE PLAN V	12/08/2022	–
CG501	GRADING & DRAINAGE DETAILS I	12/08/2022	–
CG502	GRADING & DRAINAGE DETAILS II	12/08/2022	–
CG503	GRADING & DRAINAGE DETAILS III	12/08/2022	–
CG504	GRADING & DRAINAGE DETAILS IV	12/08/2022	–
CG505	GRADING & DRAINAGE DETAILS V	12/08/2022	–
CU100	OVERALL UTILITY PLAN	12/08/2022	–
CU101	UTILITY PLAN I	12/08/2022	–
CU102	UTILITY PLAN II	12/08/2022	–
CU103	UTILITY PLAN III	12/08/2022	–
CU104	UTILITY PLAN IV	12/08/2022	–
CU501	UTILITY DETAILS I	12/08/2022	–
CU502	UTILITY DETAILS II	12/08/2022	–
CU503	UTILITY DETAILS III	12/08/2022	–
CE100	OVERALL SOIL EROSION & SEDIMENT CONTROL PLAN	12/08/2022	–
CE501	SOIL EROSION & SEDIMENT CONTROL DETAILS I	12/08/2022	–
CE502	SOIL EROSION & SEDIMENT CONTROL DETAILS II	12/08/2022	–
LL100	OVERALL SITE LIGHTING PLAN	12/08/2022	–
LL101	SITE LIGHTING PLAN I	12/08/2022	–
LL102	SITE LIGHTING PLAN II	12/08/2022	–
LL103	SITE LIGHTING PLAN III	12/08/2022	–
LL104	SITE LIGHTING PLAN IV	12/08/2022	–
LL501	SITE LIGHTING DETAILS I	12/08/2022	–
LP100	OVERALL PLANTING PLAN	12/08/2022	–
LP101	PLANTING PLAN I	12/08/2022	–
LP102	PLANTING PLAN II	12/08/2022	–
LP103	PLANTING PLAN III	12/08/2022	–
LP104	PLANTING PLAN IV	12/08/2022	–
LP105	PLANTING PLAN V	12/08/2022	–
LP501	PLANTING DETAILS I	12/08/2022	–
LP502	PLANTING DETAILS II	12/08/2022	–

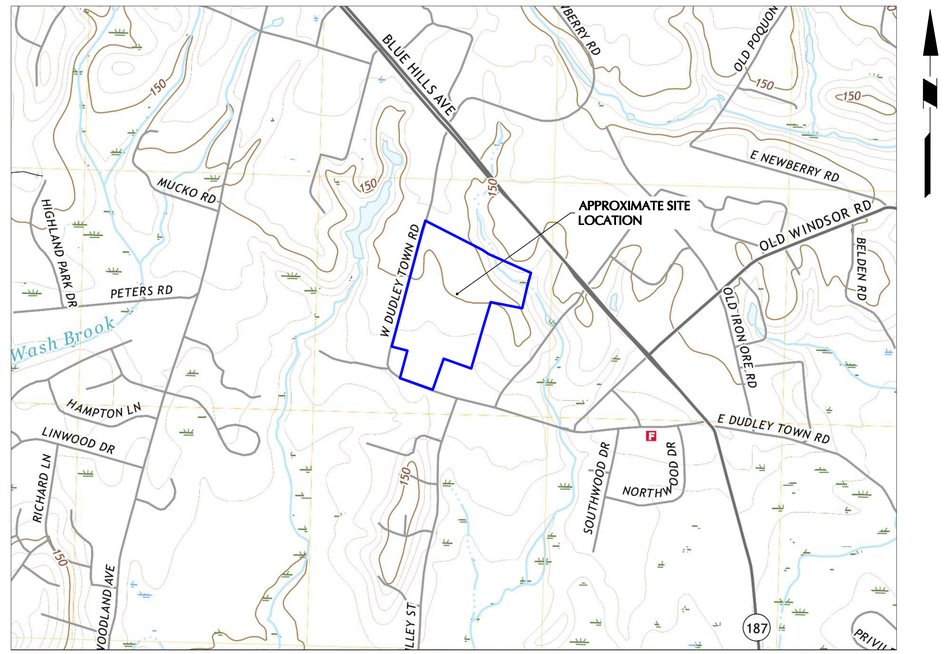

MAP REFERENCE: USGS HARTFORD NORTH QUADRANGLE MAP, 2021 (7.5-MINUTE SERIES)

LOCATION MAP

SCALE: 1" = 1000'

PROPERTY OWNERS WITHIN 500'

ID	PROPERTY LOCATION	PROPERTY OWNER	PROPERTY OWNER ADDRESS
15–149	246A WOODLAND AVENUE	TOWN OF BLOOMFIELD	800 BLOOMFIELD AVENUE, BLOOMFIELD, CT 06002
16–1	129 WEST DUDLEY TOWN ROAD	ADVANCED GAS CO. INC.	129 WEST DUDLEY TOWN ROAD, BLOOMFIELD, CT
16–11	111 WEST DUDLEY TOWN ROAD	FJS PROPERTIES LLC	19 EAST DUDLEY TOWN ROAD, BLOOMFIELD, CT 06002
16–14	91 WEST DUDLEY TOWN ROAD	RREF III–P VISION–95 LLC	1 BLOOMFIELD AVENUE, MOUNTAIN LAKES, NJ 07046
16–16	1330 BLUE HILLS AVENUE	KAMAN CORPORATION	1332 BLUE HILLS AVENUE, BLOOMFIELD, CT 06002
16–2	117 WEST DUDLEY TOWN ROAD	NEESAM LLC	117 WEST DUDLEY TOWN ROAD, BLOOMFIELD, CT 06002
16–21	101 WEST DUDLEY TOWN ROAD	RREF 111–P VISION–BLFD LLC	1 BLOOMFIELD AVENUE, MOUNTAIN LAKES, NJ, 07046
16–24	1345 BLUE HILLS AVENUE	CLZ REALTY LLC	PO BOX 336, BLOOMFIELD, CT 06002
16–25	1335 BLUE HILLS AVENUE	H&Z LLC	142 KING PHILIP DRIVE, WEST HARTFORD, CT 06107
16–32	132 WEST DUDLEY TOWN ROAD	KAD BLOOMFIELD REALTY LLC	583 SOUTH STREET, NEW BRITAIN, CT 06051
16–33	105 WEST DUDLEY TOWN ROAD	LOMBARDO DEVELOPMENT LLC	283 TERRY PLAINS ROAD, BLOOMFIELD, CT 06002
16–34	109 WEST DUDLEY TOWN ROAD	EQUITAIR INC	15 BRUNSWICK AVENUE, WEST HARTFORD, CT 06107
16–35	79 WEST DUDLEY TOWN ROAD	SUSAYA ROGELIO V &	79 WEST DUDLEY TOWN ROAD, BLOOMFIELD, CT 06002
16–36	77 WEST DUDLEY TOWN ROAD	MSD PROPERTY MANAGEMENT LLC	75 WEST DUDLEY TOWN ROAD, BLOOMFIELD, CT 06002
16–39	131 WEST DUDLEY TOWN ROAD	TKM REALTY LLC	600 WOLCOTT HILL ROAD, WETHERSFIELD, CT 06109
16–40	126 WEST DUDLEY TOWN ROAD	LITCHFIELD FAMILY LLC	PO BOX 553, SIMSBURY, CT 06070
16–41	121 WEST DUDLEY TOWN ROAD	RREF 111–P VISION–BLFD LLC	1 BLOOMFIELD AVENUE, MOUNTAIN LAKES, NJ 07046
16–42	1343 BLUE HILLS AVENUE	CLZ REALTY LLC	PO BOX 336, BLOOMFIELD, CT 06002
16–45	97 WEST DUDLEY TOWN ROAD	WORLUND CARRIANNE &	190 POOLE ROAD, SUFFIELD, CT 06078
16–46	1333 BLUE HILLS AVENUE	SHOHAM SCOTT	44 FERNCLIFF DRIVE, WEST HARTFORD, CT 06117
16–48	1346 BLUE HILLS AVENUE	RATI REALTY LLC	1346 BLUE HILLS AVENUE, BLOOMFIELD, CT 06001
16–49	1331 BLUE HILLS AVENUE	KAMAN CORPORATION	1332 BLUE HILLS AVENUE, BLOOMFIELD, CT 06001
16–5	75 WEST DUDLEY TOWN ROAD	MSD PROPERTY MANAGEMENT LLC	75 WEST DUDLEY TOWN ROAD, BLOOMFIELD, CT 06002
16–50	62 WEST DUDLEY TOWN ROAD	CUNNANE MARGARET	223 TUNXIS AVENUE, BLOOMFIELD, CT 06002
16–51	124 WEST DUDLEY TOWN ROAD	KENTUCKY BLUE PROPERTIES LLC	124 WEST DUDLEY TOWN ROAD, BLOOMFIELD, CT 06002
16–52	86 WEST DUDLEY TOWN ROAD	SPONZO ENTERPRISES LLC	19 EAST DUDLEY TOWN ROAD, BLOOMFIELD, CT 06002
16–65	135 WEST DUDLEY TOWN ROAD	JAC REALTY PARTNERS LLC	135 WEST DUDLEY TOWN ROAD, BLOOMFIELD, CT 06002
16–66	113 WEST DUDLEY TOWN ROAD	LNI PROPERTIES LLC	113 WEST DUDLEY TOWN ROAD, BLOOMFIELD, CT 06002
16–67	1353 BLUE HILLS AVENUE	CLZ REALTY LLC	1345 BLUE HILLS AVENUE, BLOOMFIELD, CT 06002
16–7	70 WEST DUDLEY TOWN ROAD	BLASIG LUCILLE	70 WEST DUDLEY TOWN ROAD, BLOOMFIELD, CT 06002
16–9	122 WEST DUDLEY TOWN ROAD	122 WEST DUDLEY LLC	PO BOX 591653, HOUSTON, TX 77259
21–115	1 KRISTINS WAY	FLT MALLORY RIDGE EP LLC	2082 MICHELSON DRIVE, SUITE 400, IRVINE, CA 92612
21–3	103 FILLEY STREET	SERIGNESE MARTIN V III	103 FILLEY STREET, BLOOMFIELD, CT 06002
21–48	73 WEST DUDLEY TOWN ROAD	MSD PROPERTY MANAGEMENT LLC	75 WEST DUDLEY TOWN ROAD, BLOOMFIELD, CT 06002
21–64	61 WEST DUDLEY TOWN ROAD	POINT PROPERTY LLC	PO BOX 686, SIMSBURY, CT 06070
21–68	71 WEST DUDLEY TOWN ROAD	VENORA DANIEL A TR &	192 DUNCASTER ROAD, BLOOMFIELD, CT 06002
21–69	105 FILLEY STREET	RSS REAL ESTATE LLC	105A FILLEY STREET REAR, BLOOMFIELD, CT 06002

APPLICANT/DEVELOPER
NORTHPOINT DEVELOPMENT
C/O: BRYAN ROSLUND
3315 NORTH OAK TRAFFICWAY
KANSAS CITY, MO 64116
PHONE: (816) 888-7380

LAND USE ATTORNEY
ROBINSON & COLE LLP
C/O: THOMAS CODY
280 TRUMBULL STREET
HARTFORD, CT 06103
PHONE: (860) 275-8264

LAND SURVEYOR, CIVIL ENGINEER, & LANDSCAPE ARCHITECT
LANGAN ENGINEERING & ENVIRONMENTAL SERVICES, INC
C/O: DAVID GAGNON
555 LONG WHARF DRIVE
NEW HAVEN, CT 06511
PHONE: (203) 562-5771

SOIL SCIENTIST
ALL-POINTS TECHNOLOGY CORPORATION
C/O: DEAN GUSTAFSON
567 VAUXHALL STREET EXTENSION, SUITE 311
WATERFORD, CT 06385
PHONE: (860) 552-2033

RELEASE DATES

DATE	ISSUED FOR
12/08/2022	INLAND WETLANDS AND WATERCOURSES COMMISSION PERMIT APPLICATION

FOR PERMITTING ONLY, NOT FOR CONSTRUCTION

LANGAN

LANGAN

Project No. 140255601

© 2022 Langan

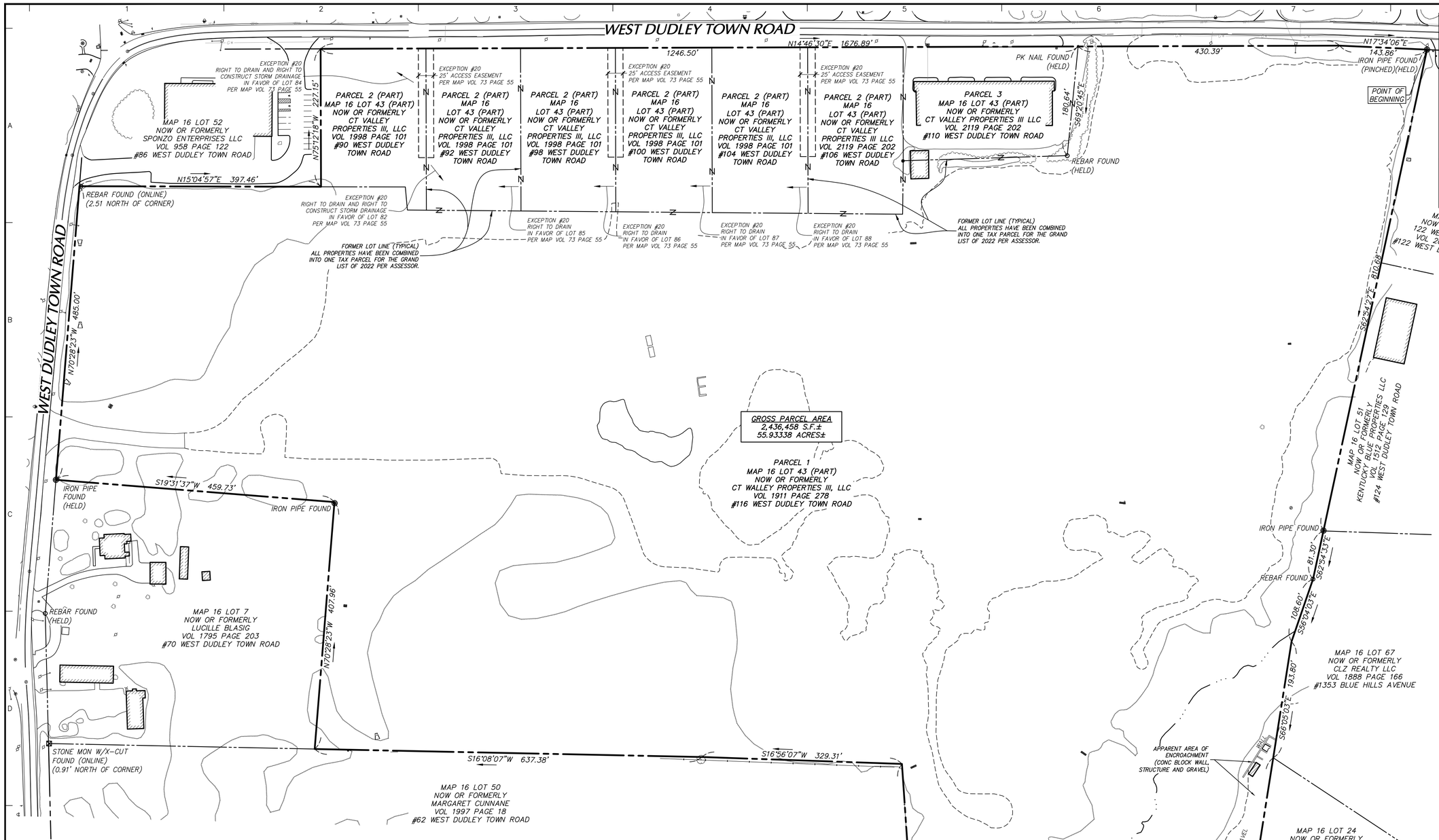

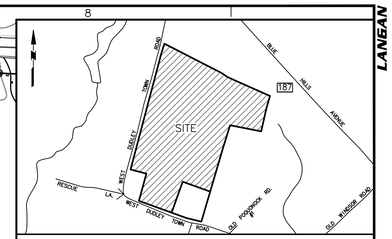

PROJECT LOCATION MAP

SCALE: 1"=1000'

SOURCE: CONNECTICUT DEPARTMENT OF TRANSPORTATION

THIS IS TO CERTIFY TO:

THAT THIS MAP OR PLAT AND THE SURVEY ON WHICH IT IS BASED WERE MADE IN ACCORDANCE WITH THE 2021 MINIMUM STANDARD DETAIL REQUIREMENTS FOR ALTA/NSPS LAND TITLE SURVEYS, JOINTLY ESTABLISHED AND ADOPTED BY ALTA AND NSPS, AND INCLUDES ITEMS 2, 3, 4, 5, 8, 13, 16, AND 17 OF TABLE A THEREOF. THE FIELD WORK WAS COMPLETED ON OCTOBER 10, 2022.

DATE OF MAP: OCTOBER 11, 2022

10/11/2022

ANDREW G. IVES, P.L.S. #70286 DATE

STATE OF CONNECTICUT ANDREW G. IVES #70286 LICENSED LAND SURVEYOR

LEGEND (NOT SHOWN TO SCALE)

- EASEMENT LINE
- PROPERTY LINE

NOTES

1. THIS SURVEY HAS BEEN PREPARED PURSUANT TO THE REGULATIONS OF CONNECTICUT STATE AGENCIES SECTIONS 20–300b–1 THROUGH 20–300b–20 AND THE "STANDARDS FOR SURVEYS AND MAPS IN THE STATE OF CONNECTICUT" AS ADOPTED BY THE CONNECTICUT ASSOCIATION OF LAND SURVEYORS, INC. ON SEPTEMBER 26, 1996.
   a. THIS SURVEY IS A PROPERTY SURVEY CONFORMING TO A HORIZONTAL ACCURACY OF A–2 AND A TOPOGRAPHIC SURVEY CONFORMING TO A T–2 ACCURACY. THE BOUNDARY DETERMINATION IS A RESURVEY. THE PURPOSE OF THIS SURVEY IS TO PROVIDE A BOUNDARY OPINION AND DEPICT SITE FEATURES FOR FUTURE SITE DEVELOPMENT.
2. THIS SURVEY IS BASED UPON, DEED INFORMATION AND THE FOLLOWING REFERENCES:
   A. MAP TITLED "COMPILED PLAN PROPERTY OF BERCROSE ASSOCIATES W. DUDLEY TOWN ROAD BLOOMFIELD, CONN.", SCALE: 1"=100', DATED: AUG. 1955, LAST REVISED: JULY, 1970, BY: PETERSON & HOFFMAN, ENG'RS., MAP VOL 35 PAGE 1746
   B. MAP TITLED "BOUNDARY SURVEY/LOT SPLIT PROPERTY OF WEST DUDLEY TOWN ROAD, LLC 1353 BLUE HILLS AVENUE CONNECTICUT ROUTE 187 BLOOMFIELD CONNECTICUT", SCALE: 1"=40', DATED: 4–29–2008, BY: J.R. RUSSO & ASSOCIATES, MAP VOL 69 PAGE 87
   C. MAP TITLED "100 WEST DUDLEY TOWN ROAD INDUSTRIAL SUBDIVISION, SUBDIVISION PLAN PREPARED FOR ADVANCED GAS CO., INC. LOT 1012 100 WEST DUDLEY TOWN ROAD BLOOMFIELD, CONNECTICUT", SCALE: 1"=40', DATED: APRIL 1, 2019, LAST REVISED: 6–10–2019, SHEET 1 OF 3, BY: ALFORD ASSOCIATES, INC., MAP VOL 73 PAGE 55
   D. MAP TITLED "100 WEST DUDLEY TOWN ROAD INDUSTRIAL SUBDIVISION, SITE DEVELOPMENT PLAN PREPARED FOR ADVANCED GAS CO., INC. LOT 1012 100 WEST DUDLEY TOWN ROAD BLOOMFIELD, CONNECTICUT", SCALE: 1"=40', DATED: APRIL 1, 2019, LAST REVISED: 4–10–2019, SHEET 2 OF 3, BY: ALFORD ASSOCIATES, INC., MAP VOL 73 PAGE 56
   E. MAP TITLED "100 WEST DUDLEY TOWN ROAD INDUSTRIAL SUBDIVISION, EXISTING CONDITIONS SURVEY PREPARED FOR ADVANCED GAS CO., INC. LOT 1012 100 WEST DUDLEY TOWN ROAD BLOOMFIELD, CONNECTICUT", SCALE: 1"=40', DATED: APRIL 1, 2019, SHEET 3 OF 3, BY: ALFORD ASSOCIATES, INC., MAP VOL 73 PAGE 57
3. THE MERIDIAN OF THIS SURVEY IS REFERENCED TO CONNECTICUT STATE PLANE COORDINATE SYSTEM NAD 83 (EPOCH 2011). POSITION WAS DETERMINED BY GLOBAL NAVIGATION SATELLITE SYSTEMS (GNSS) AS PROVIDED BY HXGN SMARTNET CONTINUOUSLY OPERATED REFERENCE STATIONS (CORS).
4. AS PER THE NATIONAL FLOOD INSURANCE PROGRAM FIRM MAP ENTITLED "HARTFORD COUNTY, CONNECTICUT PANEL 351 & 352 OF 675, MAP NUMBER: 09003C0351F & 09003C0352F, EFFECTIVE DATE: SEPTEMBER 26, 2008" THE PROJECT AREA IS IN ZONE X (UNSHADED).
5. EVIDENCE OF CURRENT EARTH MOVING WORK WAS OBSERVED ON THE SUBJECT PREMISES. NO EVIDENCE OF BUILDING CONSTRUCTION OR BUILDING ADDITIONS WAS OBSERVED ON THE SUBJECT PREMISES.
6. NO EVIDENCE OF STREET RIGHT OF WAY LINE CHANGES OR OBSERVED EVIDENCE OF RECENT STREET OR SIDEWALK CONSTRUCTION OR REPAIRS WAS OBSERVED.
7. BOUNDARY SURVEYED IS SUBSTANTIALLY THE SAME AS THAT AS DESCRIBED IN SCHEDULE A OF THE REFERENCED TITLE REPORT.
8. PRIOR TO ANY DESIGN OR CONSTRUCTION, THE PROPER UTILITY AGENCIES MUST BE CONTACTED FOR VERIFICATION OF UTILITY TYPE AND FOR FIELD LOCATIONS.
9. THIS SURVEY IS NOT VALID WITHOUT THE EMBOSSED OR INKED SEAL OF THE PROFESSIONAL.

TITLE REPORT

116 WEST DUDLEY TOWN ROAD

COMMITMENT FOR TITLE INSURANCE ISSUED BY CHICAGO TITLE INSURANCE COMPANY. ORDER NUMBER: SH22003349CT, COMMITMENT DATE: JULY 27, 2022. SCHEDULE B SECTION II:

1–3. NOT SURVEY RELATED.

4. SURVEY PROVIDED.

5–14. NOT SURVEY RELATED.

15. WATER MAIN CAVEAT AS DEFINED IN VOL 125 PAGE 852. PERTAINS TO WATER MAIN IN WEST DUDLEY TOWN ROAD.

16–19. NOT SURVEY RELATED.

20. PROVIDED MAPS HAVE BEEN REFERENCED IN NOTE 2 OF THIS SURVEY. MAP 16/794 WAS NOT PROVIDED TO SURVEYOR.

21–23. NOT SURVEY RELATED.

Date	Description	No.

REVISIONS

LANGAN

Langan CT, Inc.
555 Long Wharf Drive
New Haven, CT 06511

T: 203.562.5771 F: 203.789.6142 www.langan.com

Project

116 WEST DUDLEY TOWN ROAD

BLOOMFIELD CONNECTICUT

Drawing Title

ALTA/NSPS LAND TITLE SURVEY

(BOUNDARY SURVEY)

Project No. 140255601	Drawing No. VL101
Date OCTOBER 11, 2022	
Drawn By JJS	
Checked By AGI	Sheet 1 of 1

LANGAN

PROJECT NO. 140255601

© 2022 Langan

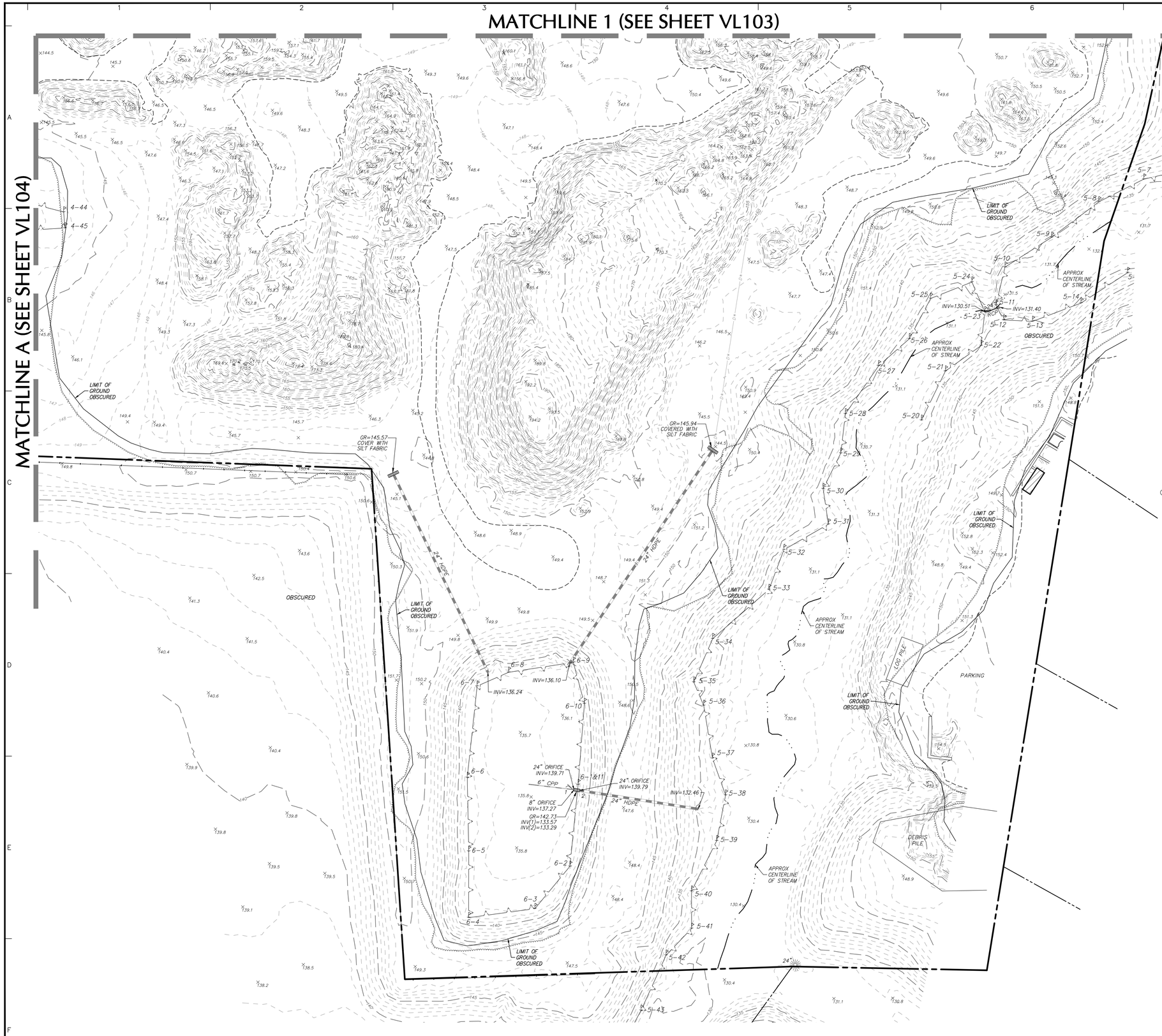

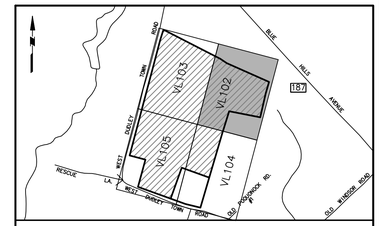

PROJECT LOCATION MAP

SCALE: 1"=1000'

SOURCE: CONNECTICUT DEPARTMENT OF TRANSPORTATION

CT NAD 83

LEGEND (NOT SHOWN TO SCALE)

- AIR CONDITIONING UNIT
- BOLLARD
- FLAG POLE
- MAILBOX
- MONITORING WELL
- PARKING METER
- SIGN
- SHRUB
- TREE
- WETLAND FLAG
- GROUND LIGHT
- CABLE BOX HAND HOLE
- CATCH BASIN
- CLEANOUT
- ELECTRIC BOX
- ELECTRIC METER
- FIRE HYDRANT
- FLARED END SECTION
- COMMUNICATION BOX
- GAS METER
- GAS VALVE
- GUY POLE
- GUY WIRE
- HAND HOLE
- LIGHT POLE
- MANHOLE (TYPE AS LABELED)
- POST INDICATOR VALVE
- POWER POLE
- ROOF DRAIN
- STANDPIPE
- TELEPHONE BOOTH
- TRAFFIC SIGNAL BOX
- PEDESTRIAN PUSH BUTTON
- TRAFFIC SIGNAL
- TRAFFIC SIGNAL ARM
- TRAFFIC SIGNAL POLE
- UNDERGROUND VAULT
- VALVE UNKNOWN
- WATER METER
- WATER VALVE
- X.262.3 — SPOT ELEVATION
- BIT — BITUMINOUS
- CONC — CONCRETE
- CP — CONCRETE PAD
- LSA — LANDSCAPED AREA
- BOH — BUILDING OVERHANG
- BW — BOTTOM OF WALL
- EP — EDGE OF PAVEMENT
- EG — EDGE OF GRAVEL
- EW — EDGE OF WALK
- DW — DETECTABLE WARNING
- BC — BITUMINOUS CURB
- CC — CONCRETE CURB
- GC — GRANITE CURB
- SG — SLOPED GRANITE CURB
- SWS — SINGLE WHITE STRIPE
- BWS — BROKEN WHITE STRIPE
- SYS — SINGLE YELLOW STRIPE
- DYS — DOUBLE YELLOW STRIPE
- METAL GUARD RAIL
- WOOD GUARD RAIL
- STOCKADE FENCE
- CHAINLINK FENCE
- IRON FENCE
- TREE LINE
- OVERHEAD WIRE
- WETLAND LINE
- EASEMENT LINE
- PROPERTY LINE
- 322 — CONTOUR LINE
- CATV — CABLE TV MARK OUT LINE
- D — DRAINAGE MARK OUT LINE
- E — ELECTRIC MARK OUT LINE
- C — COMMUNICATION MARK OUT LINE
- G — GAS MARK OUT LINE
- S — SANITARY SEWER MARK OUT LINE
- W — WATER MARK OUT LINE
- ST — STEAM MARK OUT LINE
- UNK — UNKNOWN MARK OUT LINE
- R* — REFERENCE UTILITY LINE (TYPE AS NOTED) – PLOTTED FROM EXISTING MAPPING

40 0 10 25 40
SCALE: 1 INCH = 40 FEET

STATE OF CONNECTICUT ANDREW G. GIELT No. 70298 LICENSED LAND SURVEYOR

Date	Description	No.

REVISIONS

LANGAN

Langan CT, Inc.
555 Long Wharf Drive
New Haven, CT 06511

T: 203.562.5771 F: 203.789.6142 www.langan.com

Project

116 WEST DUDLEY TOWN ROAD

BLOOMFIELD CONNECTICUT

Drawing Title

ALTA/NSPS LAND TITLE SURVEY

(TOPOGRAPHIC SURVEY)

Project No. 140255601

Date OCTOBER 11, 2022

Drawn By JJS

Checked By AGI

Drawing No. VL102

Sheet 2 of 5

LANGAN

PROJECT NO. 140255601

Filename: \\langan.com\data\HVY\data\61\140255601\Project Data_Discipline\Survey\CAD\Existing\140255601-V-EX0101.dwg Date: 12/7/2022 Time: 09:41 User: jjstublic Style Table: Langan.stb Layout: VL102

©2023 LANGAN

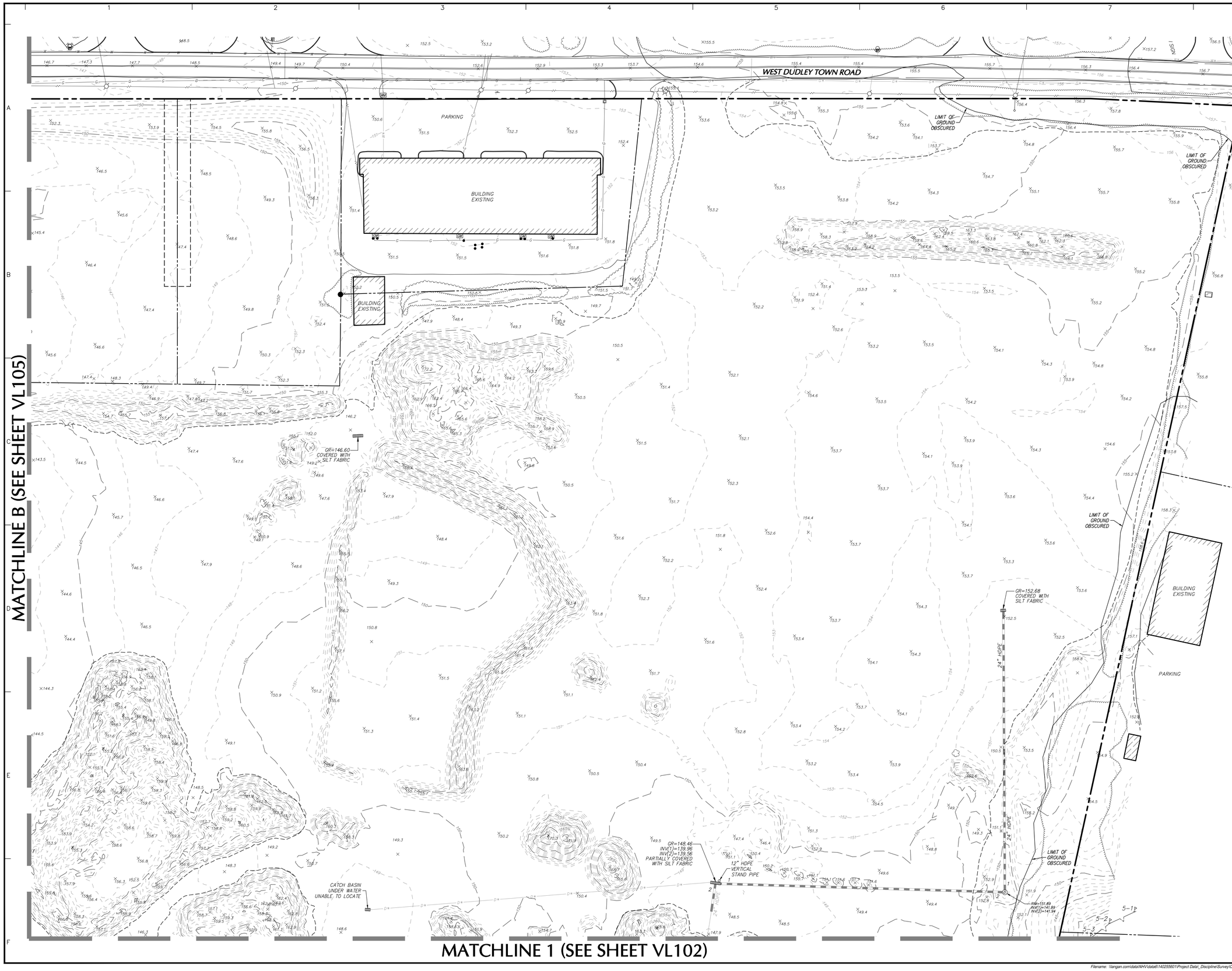

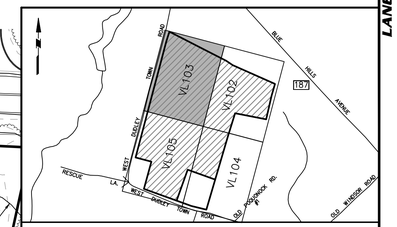

PROJECT LOCATION MAP

SCALE: 1"=1000'

SOURCE:
CONNECTICUT DEPARTMENT OF TRANSPORTATION

Date	Description	No.

REVISIONS

LANGAN

Langan CT, Inc.
555 Long Wharf Drive
New Haven, CT 06511

T: 203.562.5771 F: 203.789.6142 www.langan.com

Project

116 WEST DUDLEY TOWN ROAD

BLOOMFIELD CONNECTICUT

Drawing Title

ALTA/NSPS LAND TITLE SURVEY

(TOPOGRAPHIC SURVEY)

Project No. 140255601	Drawing No. VL103
Date OCTOBER 11, 2022	
Drawn By JJS	
Checked By AGI	Sheet 3 of 5

PROJECT NO. 140255601

© 2022 Langan

Filename: \\langan.com\data\NHV\data6\140255601\Project Data_Discipline\Survey\CAD\Existing\140255601-V-EX0101.dwg Date: 12/7/2022 Time: 09:41 User: jstublic Style Table: Langan.stb Layout: VL103

RECORD DESCRIPTION

116 WEST DUDLEY TOWN ROAD
AS TO PARCEL 1:

A CERTAIN PIECE OR PARCEL OF LAND SITUATED ON THE NORTH AND EAST SIDES OF WEST DUDLEY TOWN ROAD, AND ON THE SOUTH SIDE OF BLUE HILLS AVENUE, IN THE TOWN OF BLOOMFIELD, COUNTY OF HARTFORD AND STATE OF CONNECTICUT, AND MORE PARTICULARLY BOUNDED AND DESCRIBED AS FOLLOWS:

BEGINNING AT A POINT IN THE NORTH STREET LINE OF WEST DUDLEY TOWN ROAD ABOUT 310 FEET WEST OF THE CENTER LINE OF FILLEY STREET, MARKING THE SOUTHWEST CORNER OF LAND NOW OR FORMERLY OF AUGUST BLASIG AND THE SOUTHEAST CORNER OF THE HEREIN DESCRIBED PREMISES. THENCE RUNNING NORTH AT RIGHT ANGLES TO THE NORTH STREET LINE OF SAID WEST DUDLEY TOWN ROAD, AND ALONG LAND NOW OR FORMERLY OF SAID AUGUST F. BLASIG, A DISTANCE OF 459.73 FEET TO A POINT; THENCE TURNING AN INTERIOR ANGLE OF 270° 00' 00", AND RUNNING EAST ALONG OTHER LAND NOW OR FORMERLY OF SAID BLASIG, A DISTANCE OF 407.96 FEET TO A POINT IN THE WEST LINE OF LAND NOW OR FORMERLY OF MICHAEL J. CUNNANE; THENCE TURNING AN INTERIOR ANGLE OF 86° 36' 30" AND RUNNING NORTH A DISTANCE OF 637.38 FEET TO A MERESTONE; THENCE TURNING AN INTERIOR ANGLE OF 180° 48' 00", AND CONTINUING NORTH A DISTANCE OF 330.82 FEET TO A MERESTONE; THENCE TURNING AN INTERIOR ANGLE OF 263° 54' 15", AND RUNNING EAST A DISTANCE OF 442.86 FEET TO A MERESTONE; THENCE TURNING AN INTERIOR ANGLE OF 91° 50' 50", AND RUNNING NORTH A DISTANCE OF 339.65 FEET TO A MERESTONE. THE LAST FOUR (4) COURSES BEING ALONG LAND NOW OR FORMERLY OF SAID MICHAEL J. CUNNANE. THENCE TURNING AN INTERIOR ANGLE OF 182° –58' –45" AND RUNNING NORTH ALONG LAND NOW OR FORMERLY OF BERTHA S. GERBER, A DISTANCE OF 170.47 FEET TO A MERESTONE; THENCE TURNING AN INTERIOR ANGLE OF 98° 01' 20", AND RUNNING WEST ALONG OTHER LAND NOW OR FORMERLY OF SAID BERTHA S. GERBER, ALONG LAND NOW OR FORMERLY OF MICKOLINA TALBOT, AND ALONG LAND NOW OR FORMERLY OF ARNOLD T. JENSEN, PARTLY ON EACH, IN ALL A DISTANCE OF 453.60 FEET TO A POINT; THENCE TURNING AN INTERIOR ANGLE OF 294° 31' 30", AND RUNNING NORTH ALONG OTHER LAND NOW OR FORMERLY OF SAID ARNOLD T. JENSEN, A DISTANCE OF ABOUT 583.6 FEET TO BLUE HILLS AVENUE; THENCE TURNING AN INTERIOR ANGLE OF 90° 13' 30" AND RUNNING WEST ALONG SAID BLUE HILLS AVENUE, A DISTANCE OF ABOUT 281.5 FEET TO A PIPE; THENCE TURNING AN INTERIOR ANGLE OF 179° 46' 30", AND CONTINUING WEST ALONG BLUE HILLS AVENUE, A DISTANCE OF ABOUT 536.5 FEET TO A POINT; THENCE TURNING AN INTERIOR ANGLE OF 57° 00', AND RUNNING SOUTH ALONG LAND NOW OR FORMERLY OF JULIUS TILLEY, A DISTANCE OF ABOUT 591.7 FEET TO A PIPE; THENCE TURNING ON AN INTERIOR ANGLE OF 181° 29', AND CONTINUING SOUTH ALONG OTHER LAND NOW OR FORMERLY OF JULIUS TILLEY, A DISTANCE OF 264.85 FEET TO A PIPE; THENCE TURNING AN INTERIOR ANGLE OF 280° –10' –00", AND RUNNING WEST ALONG OTHER LAND NOW OR FORMERLY OF JULIUS TILLEY, A DISTANCE OF 810.52 FEET TO THE EAST STREET LINE OF WEST DUDLEY TOWN ROAD; THENCE TURNING AN INTERIOR ANGLE OF 80° 28' 36", AND RUNNING SOUTH ALONG THE EAST STREET LINE OF SAID WEST DUDLEY TOWN ROAD, A DISTANCE OF 143.86 FEET TO A POINT; THENCE TURNING AN INTERIOR ANGLE OF 177° 12' 24", AND CONTINUING SOUTH ALONG THE EAST STREET LINE OF SAID WEST DUDLEY TOWN ROAD, A DISTANCE OF 430.39 FEET TO A POINT MARKING THE NORTHWEST CORNER OF LAND NOW OR FORMERLY OF HAROLD AND ESTHER H. BROE; THENCE TURNING AN INTERIOR ANGLE OF 95° 52' 45", AND RUNNING EAST A DISTANCE OF 180.64 FEET TO A PIPE; THENCE TURNING AN INTERIOR ANGLE OF 262° 30' 00" AND RUNNING SOUTH A DISTANCE OF 270.0 FEET TO A PIPE; THENCE TURNING AN INTERIOR ANGLE OF 92° 25' 15", AND RUNNING EAST A DISTANCE OF 88.0 FEET TO A PIPE; THENCE TURNING AN INTERIOR ANGLE OF 269° 51' 50", AND RUNNING SOUTH A DISTANCE OF 815.0 FEET TO A POINT; THENCE TURNING AN INTERIOR ANGLE OF 264° 25' 00", AND RUNNING WEST A DISTANCE OF 36.0 FEET TO A POINT; THENCE TURNING AN INTERIOR ANGLE OF 95° –27' –20", AND RUNNING SOUTH A DISTANCE OF 533.74 FEET TO A POINT IN THE NORTH STREET LINE OF WEST DUDLEY TOWN ROAD. THE LAST SIX (6) COURSES BEING ALONG LAND NOW OR FORMERLY OF HAROLD AND ESTHER H. BROE. THENCE TURNING AN INTERIOR ANGLE OF 94° 26' 40", AND RUNNING EAST ALONG THE NORTH STREET LINE OF SAID WEST DUDLEY TOWN ROAD, A DISTANCE OF 485.0 FEET TO THE POINT OR PLACE OF BEGINNING.

THE HEREIN DESCRIBED PREMISES CONTAIN 58.0 ACRES, MORE OR LESS.

THE HEREIN DESCRIBED PREMISES ARE MORE PARTICULARLY BOUNDED AS FOLLOWS:

NORTH ON LAND NOW OR FORMERLY OF JULIUS TILLEY, BY BLUE HILLS AVENUE, ON LAND NOW OR FORMERLY OF ARNOLD T. JENSEN, ON LAND NOW OR FORMERLY OF MICKOLINA TALBOT, ON LAND NOW OR FORMERLY OF BERTHA S. GERBER, AND ON LAND NOW OR FORMERLY OF HAROLD AND ESTHER H. BROE, PARTLY ON EACH;
EAST ON LAND NOW OR FORMERLY OF ARNOLD T. JENSEN, ON LAND NOW OR FORMERLY OF MICHAEL J. CUNNANE, AND ON LAND NOW OR

FORMERLY OF AUGUST F. BLASIG, PARTLY ON EACH;
SOUTH ON LAND NOW OR FORMERLY OF MICHAEL J. CUNNANE, ON LAND NOW OR FORMERLY OF AUGUST F. BLASIG, BY WEST DUDLEY TOWN ROAD, AND ON LAND NOW OR FORMERLY OF HAROLD AND ESTHER H. BROE, PARTLY ON EACH; AND
WEST ON LAND NOW OR FORMERLY OF HAROLD AND ESTHER H. BROE, BY WEST DUDLEY TOWN ROAD, AND ON LAND NOW OR FORMERLY OF JULIUS TILLEY, PARTLY ON EACH.

FORE A MORE PARTICULAR DESCRIPTION, REFERENCE IS MADE TO A MAP ENTITLED: "COMPILED PLAN PROPERTY OF BERCROSE ASSOCIATES W. DUDLEY TOWN ROAD BLOOMFIELD, CONN. SCALE 1 INCH = 100 FEET AUG, 1955 REVISED SEPT. 1955 REVISED JULY, 1970 PETERSON & HOFFMAN, ENG'RS."

LESS AND EXCEPTING THEREFROM THE FOLLOWING:

A CERTAIN PIECE OR PARCEL OF LAND LOCATED IN THE TOWN OF BLOOMFIELD, COUNTY OF HARTFORD AND STATE OF CONNECTICUT SAID PARCEL IS LOCATED ON THE SOUTHWEST SIDE OF BLUE HILLS AVENUE A.K.A CONNECTICUT ROUTE 187 AND IS MORE PARTICULARLY BOUNDED AND DESCRIBED AS FOLLOWS:

BEGINNING AT A POINT IN THE SOUTHWEST HIGHWAY LINE OF BLUE HILLS AVENUE A.K.A CONNECTICUT ROUTE 187, SAID POINT BEING THE NORTHWEST CORNER OF LAND OF N/F CLZ REALTY, LLC AND THE NORTHEAST CORNER OF THE PARCEL DESCRIBED HEREIN.

THENCE: S 48°28'54" W 550.57' ALONG LAND OF N/F CLZ REALTY, LLC TO A POINT.

THENCE: N 66°02'29" W 193.80' ALONG REMAINING LAND OF WEST DUDLEY TOWN ROAD, LLC TO A POINT.

THENCE: N 56°01'29" W 108.60' ALONG REMAINING LAND OF WEST DUDLEY TOWN ROAD, LLC TO AN IRON PIPE.

THENCE: N 62°51'59" W 81.30' ALONG REMAINING LAND OF WEST DUDLEY TOWN ROAD, LLC TO AN IRON PIPE.

THENCE: N 16°58'01" E 264.85' ALONG LAND OF N/F MARJON, LLC AND N/F LITCHFIELD FAMILY, LLC. PARTLY BY EACH TO A CONCRETE MONUMENT.

THENCE: N 15°29'01" E 553.46' ALONG LAND OF N/F WHISPER WOOD, INC. TO A POINT IN THE SOUTHWEST HIGHWAY LINE OF BLUE HILLS AVENUE.

THENCE: S 40°22'31" E 95.57' ALONG THE SOUTHWEST HIGHWAY LINE OF BLUE HILLS AVENUE A.K.A CONNECTICUT ROUTE 187 TO A POINT.

THENCE: S 41°29'49" E 701.49' ALONG THE SOUTHWEST HIGHWAY LINE OF BLUE HILLS AVENUE A.K.A CONNECTICUT ROUTE 187 TO THE POINT OF BEGINNING.

SAID PARCEL CONTAINS 372,003 SQUARE FEET OR 8.54 +/– ACRES.

SAID PARCEL IS SHOWN ON A SURVEY ENTITLED "BOUNDARY SURVEY/LOT SPLIT PROPERTY OF WEST DUDLEY TOWN ROAD, LLC 1353 BLUE HILLS AVENUE CONNECTICUT ROUTE 187 BLOOMFIELD CONNECTICUT JJR. RUSSO & ASSOCIATES LAND SURVEYORS & PROFESSIONAL ENGINEERS 1 SHOHAM ROAD EAST WINDSOR, CONNECTICUT 06088 (860) 623–2485 BY RS SCALE 1"=40' DATE 4–29–08 SHEET 1 OF 1 CHECKED JEU NO. 2008–027".

AS TO PARCEL #2:

ALL THOSE CERTAIN PIECES AND PARCELS OF REAL PROPERTY SITUATED IN THE TOWN OF BLOOMFIELD, COUMTY OF HARTFORD AND STATE OF CONNECTICUT, AS MORE PARTICULARLY DESCRIBED AS FOLLOWS:

SIX (6) CERTAIN PIECES OR PARCELS OF LAND, AS SHOWN AND DEPICTED AS LOTS 1–6 INCLUSIVE ON A CERTAIN MAP OR PLAN ENTITLED "100 WEST DUDLEY TOWN ROAD INDUSTRIAL SUBDIVISION SUBDIVISION PLAN PREPARED FOR ADVANCED GAS CO. INC. LOT 1012 100 WEST DUDLEY TOWN ROAD, BLOOMFIELD, CONNECTICUT ALFORD ASSOCIATES INC. CIVIL ENGINEERS WINDSOR, CONNECTICUT WILSON M. ALFORD, JR., P.E. & L.S. DATE: APRIL 1, 2019 REV. 4/10/2019 ADDED PERCOLATION TESTY DATA; 6/10/2019 REVISED PER CONDITIONS OF APPROVAL SCALE: 1 IN. = 40 FT. SHEET 1 OF 3" WHICH MAP AND PLAN WAS FILED WITH THE BLOOMFIELD TOWN CLERK.

AS TO PARCEL #3:

A CERTAIN PIECE OR PARCEL OF LAND LOCATED ON THE EASTERLY SIDE OF DUDLEY TOWN ROAD, ALSO KNOWN AS WEST DUDLEY TOWN ROAD, IN THE TOWN OF BLOOMFIELD, COUNTY OF HARTFORD AND STATE OF CONNECTICUT, TOGETHER WITH THE BUILDINGS THEREON, AND BEING MORE PARTICULARLY BOUNDED AND DESCRIBED AS FOLLOWS:

NORTHERLY: BY LAND NOW OR FORMERLY OF BERCROSE REALTY, INC., ONE HUNDRED EIGHTY AND SIXTY–FOUR ONE–HUNDREDTHS (180.64) FEET;
EASTERLY: BY LAND NOW OR FORMERLY OF BERCROSE REALTY, INC., TWO HUNDRED SEVENTY (270) FEET;
SOUTHERLY: BY LAND NOW OR FORMERLY OF MICHAEL J. SILVESTER, ET AL., ONE HUNDRED EIGHTY–SEVEN AND THIRTY–THREE ONE–HUNDREDTHS (187.33) FEET;
WESTERLY: BY WEST DUDLEY TOWN ROAD, TWO HUNDRED EIGHTY–EIGHT AND FORTY ONE–HUNDREDTHS (288.40) FEET.

SURVEYED DESCRIPTION

BEGINNING AT A POINT ON THE EASTERLY SIDE OF WEST DUDLEY TOWN ROAD, SAID POINT BEING THE SOUTHWEST CORNER OF LAND NOW OR FORMERLY OF 122 WEST DUDLEY LLC AND BEING THE NORTHWEST CORNER OF HEREIN DESCRIBED PARCEL;

THENCE S 62° 54' 27" E BOUNDED NORTHERLY BY LAND NOW OR FORMERLY OF 122 WEST DUDLEY LLC A DISTANCE OF 810.68' TO A IRON PIPE FOUND;

THENCE S 62° 54' 33" E BOUNDED NORTHERLY BY LAND NOW OR FORMERLY OF CLZ REALTY LLC A DISTANCE OF 81.30' TO A REBAR FOUND;

THENCE S 56° 04' 03" E BOUNDED NORTHERLY BY LAND NOW OR FORMERLY OF CLZ REALTY LLC A DISTANCE OF 108.60' TO A POINT;

THENCE S 66° 05' 03" E BOUNDED NORTHERLY BY LAND NOW OR FORMERLY OF CLZ REALTY LLC A DISTANCE OF 193.80' TO A POINT;

THENCE S 66° 05' 00" E BOUNDED NORTHERLY IN PART BY LAND NOW OR FORMERLY OF CLZ REALTY LLC AND IN PART BY LAND NOW OR FORMERLY OF H & Z LLC A DISTANCE OF 453.60' TO A POINT;

THENCE S 15° 53' 40" W BOUNDED EASTERLY BY LAND NOW OR FORMERLY OF H & Z LLC A DISTANCE OF 170.47' TO A POINT;

THENCE S 12° 54' 55" W BOUNDED EASTERLY BY LAND NOW OR FORMERLY OF MARGARET CUNNANE A DISTANCE OF 339.65' TO A MERESTONE MONUMENT WITH X–CUT FOUND;

THENCE N 78° 55' 55" W BOUNDED SOUTHERLY BY LAND NOW OR FORMERLY OF MARGARET CUNNANE A DISTANCE OF 448.31' TO A POINT;

THENCE S 16° 56' 07" W BOUNDED EASTERLY BY LAND NOW OR FORMERLY OF MARGARET CUNNANE A DISTANCE OF 329.31' TO A POINT;

THENCE S 16° 08' 07" W BOUNDED EASTERLY BY LAND NOW OR FORMERLY OF MARGARET CUNNANE A DISTANCE OF 637.38' TO A POINT;

THENCE N 70° 28' 23" W BOUNDED SOUTHERLY BY LAND NOW OR FORMERLY OF LUCILLE BLASIG A DISTANCE OF 407.96' TO AN IRON PIPE FOUND;

THENCE S 19° 31' 37" W BOUNDED EASTERLY BY LAND NOW OR FORMERLY OF LUCILLE BLASIG A DISTANCE OF 459.73' TO AN IRON PIPE FOUND ON THE NORTHERLY SIDE OF WEST DUDLEY TOWN ROAD;

THENCE N 70° 28' 23" W ALONG SAID NORTHERLY SIDE OF WEST DUDLEY TOWN ROAD A DISTANCE OF 485.00' TO A POINT;

THENCE N 15° 04' 57" E BOUNDED WESTERLY BY LAND NOW OR FORMERLY OF SPONZO ENTERPRISES LLC A DISTANCE OF 397.46' TO A POINT;

THENCE N 75° 12' 18" W BOUNDED SOUTHERLY BY LAND NOW OR FORMERLY OF SPONZO ENTERPRISES LLC A DISTANCE OF 227.15' TO A POINT ON THE EASTERLY SIDE OF WEST DUDLEY TOWN ROAD;

THENCE N 14° 46' 30" E ALONG SAID EASTERLY SIDE OF WEST DUDLEY TOWN ROAD A DISTANCE OF 1676.89' TO A POINT;

THENCE N 17° 34' 06" E ALONG SAID EASTERLY SIDE OF WEST DUDLEY TOWN ROAD A DISTANCE OF 143.86' TO THE POINT OF BEGINNING;

CONTAINING APPROXIMATELY 2,436,458 SQUARE FEET (55.93338 ACRES).

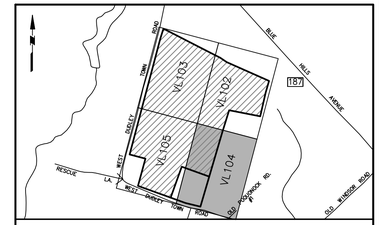

PROJECT LOCATION MAP

SCALE: 1"=1000'

SOURCE:
CONNECTICUT DEPARTMENT OF TRANSPORTATION

CT NAD 83

MATCHLINE 2 (SEE SHEET VL105)

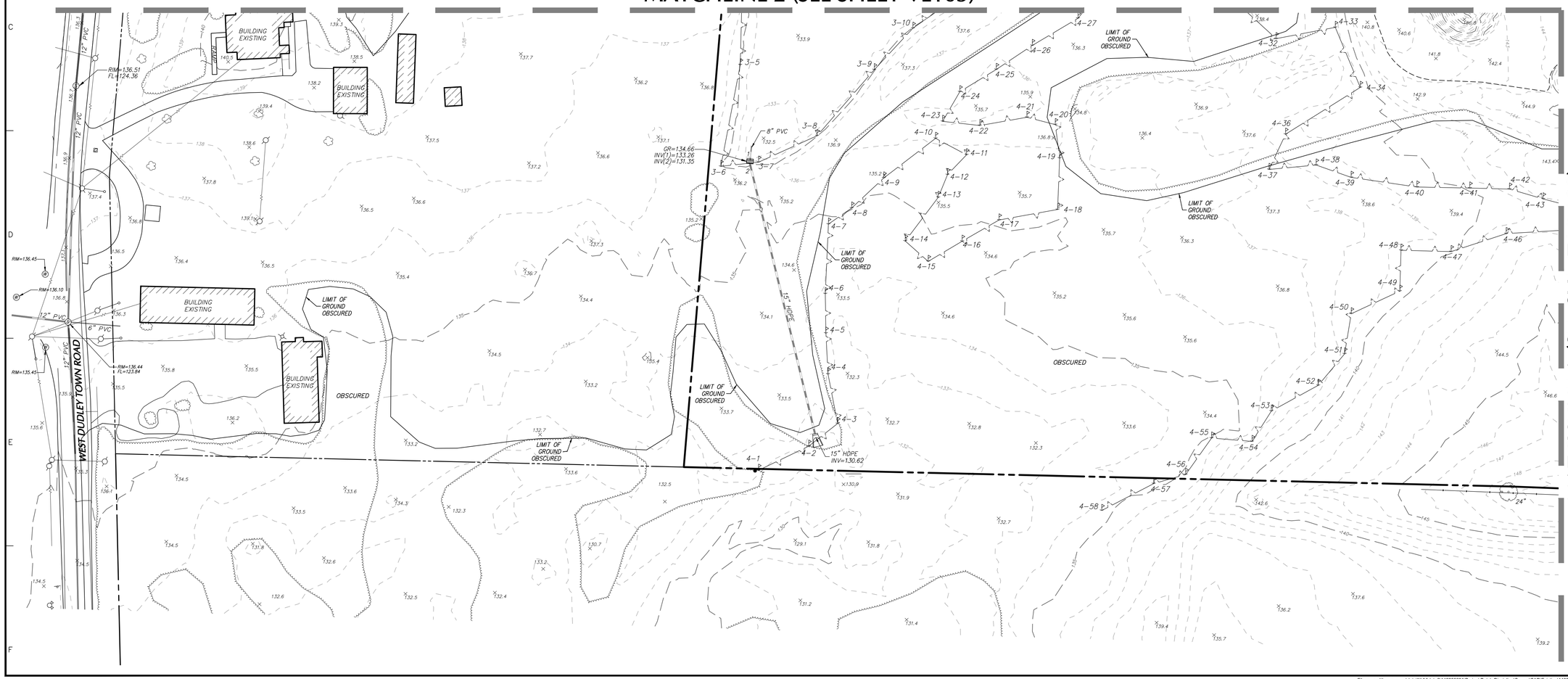

MATCHLINE A (SEE SHEET VL102)

40 0 10 25 40
SCALE: 1 INCH = 40 FEET

STATE OF CONNECTICUT
ANDREW G. WEST
No. 70298
LICENSED
LAND SURVEYOR

Date	Description	No.

REVISIONS

LANGAN

Langan CT, Inc.
555 Long Wharf Drive
New Haven, CT 06511

T: 203.562.5771 F: 203.789.6142 www.langan.com

Project

116 WEST DUDLEY TOWN ROAD

BLOOMFIELD CONNECTICUT

Drawing Title

ALTA/NSPS LAND TITLE SURVEY
(TOPOGRAPHIC SURVEY)

Project No. 140255601

Date OCTOBER 11, 2022

Drawn By JJS

Checked By AGI

Drawing No. VL104

Sheet 4 of 5

PROJECT NO. 140255601

LANGAN

© 2022 Langan

Filename: \\langan.com\data\NHV\data6\140255601\Project Data_Discipline\Survey\CAD\Existing\140255601-V-EX0101.dwg Date: 12/7/2022 Time: 09:41 User: jstublic Style Table: Langan.stb Layout: VL104

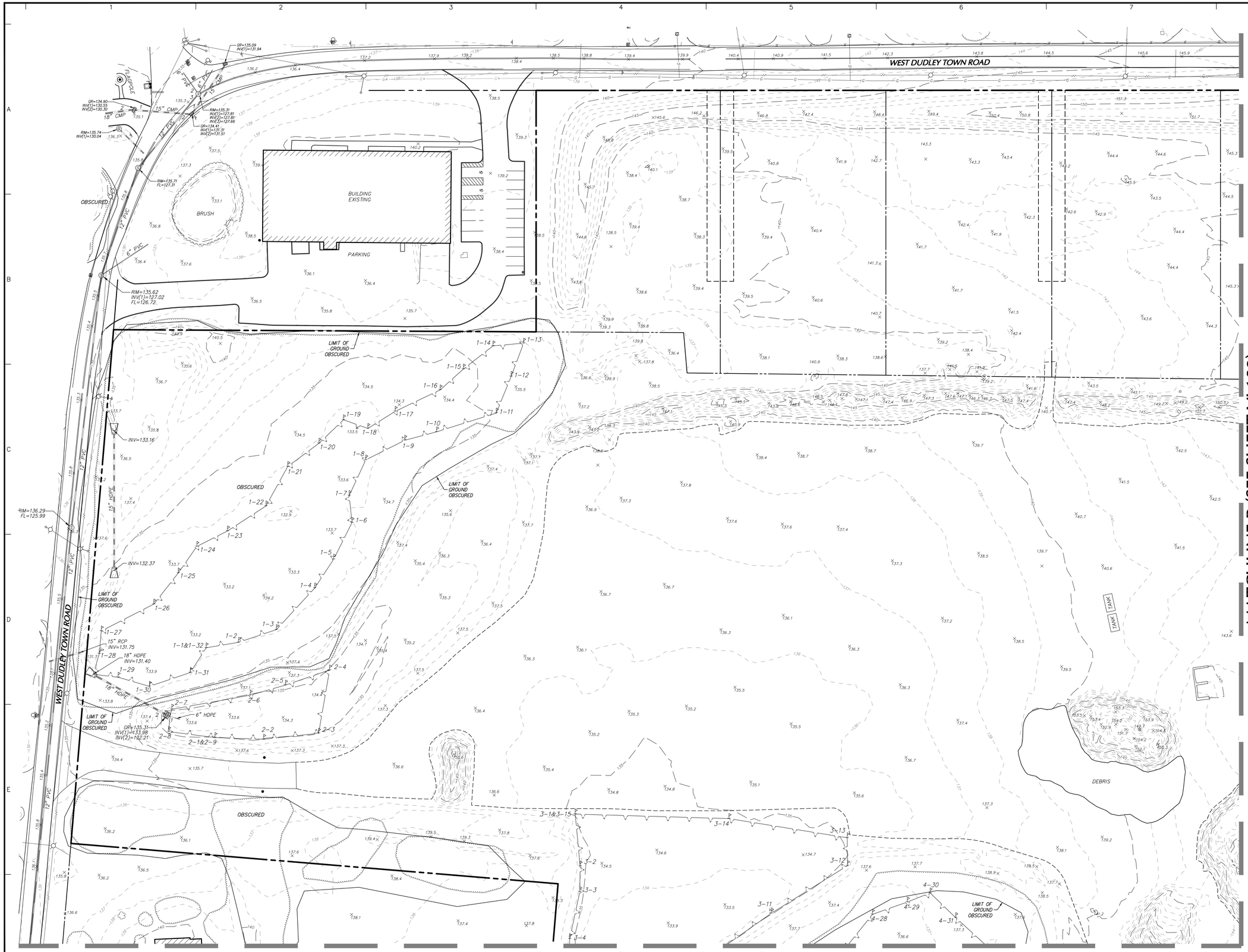

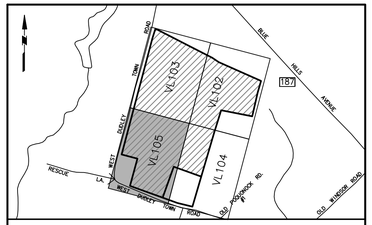

PROJECT LOCATION MAP

SCALE: 1"=1000'

SOURCE: CONNECTICUT DEPARTMENT OF TRANSPORTATION

CT NAD 83

SCALE: 1 INCH = 40 FEET

Date	Description	No.

REVISIONS

LANGAN

Langan CT, Inc.
555 Long Wharf Drive
New Haven, CT 06511

T: 203.562.5771 F: 203.789.6142 www.langan.com

Project

116 WEST DUDLEY TOWN ROAD

BLOOMFIELD CONNECTICUT

Drawing Title

ALTA/NSPS LAND TITLE SURVEY

(TOPOGRAPHIC SURVEY)

Project No.	Drawing No.
140255601	VL105
Date: OCTOBER 11, 2022	
Drawn By: JJS	
Checked By: AGI	Sheet 5 of 5

PROJECT NO. 140255601

LANGAN

© 2022 Langan

Filename: \\langan.com\data\NHV\data6\140255601\Project Data_Discipline\Survey\CAD\Existing\140255601-V-EX0101.dwg Date: 12/7/2022 Time: 09:41 User: jstublic Style Table: Langan.stb Layout: VL105

CONTRACTOR NOTES

1. THESE PLANS REPRESENT THE OVERALL SITEWORK IMPROVEMENTS REQUIRED FOR PROJECT CONSTRUCTION. THE CONTRACTOR SHALL FURNISH, INSTALL, TEST AND COMPLETE ALL WORK TO THE SATISFACTION OF THE ENGINEER AND OWNER IN ACCORDANCE WITH THE CONTRACT DOCUMENTS. THE CONTRACTOR IS SOLELY RESPONSIBLE FOR MEANS AND METHODS OF CONSTRUCTION; AS SUCH, THESE PLANS DO NOT COMPLETELY REPRESENT, NOR ARE THEY INTENDED TO REPRESENT, ALL SPECIFIC INSTRUCTIONS REQUIRED FOR SITEWORK CONSTRUCTION. THE CONTRACTOR IS RESPONSIBLE TO CONSTRUCT ALL IMPROVEMENTS DEPICTED ON THESE PLANS IN ACCORDANCE WITH ALL APPLICABLE RULES, REGULATIONS AND LAWS IN EFFECT AT THE TIME OF CONSTRUCTION.
2. THE CONTRACTOR SHALL ACCEPT THE SITE AS IS. THE CONTRACTOR SHALL ASSESS CONDITIONS, AND THE KIND, QUALITY AND QUANTITY OF WORK REQUIRED. THE OWNER AND ENGINEER MAKES NO GUARANTEE IN REGARD TO THE ACCURACY OF ANY INFORMATION THAT WAS OBTAINED DURING INVESTIGATIONS. THE CONTRACTOR SHALL: MAKE A THOROUGH SITE INSPECTION IN ORDER TO FIELD CHECK EXISTING SITE CONDITIONS; CORRELATE CONDITIONS WITH THE DRAWINGS; AND, RESOLVE ANY POSSIBLE CONSTRUCTION CONFLICTS WITH THE OWNER AND ENGINEER PRIOR TO COMMENCEMENT OF WORK. THE CONTRACTOR SHALL PERFORM ADDITIONAL TOPOGRAPHIC SURVEYS HE/SHE DEEMS NECESSARY, PROVIDED THEY ARE COORDINATED WITH THE OWNER. ANY CONDITIONS DETERMINED BY THE CONTRACTOR THAT DIFFER FROM THE INFORMATION SHOWN ON THE DRAWINGS THAT ARE NOT BROUGHT TO THE ATTENTION OF THE OWNER AND ENGINEER PRIOR TO THE START OF WORK SHALL NOT BE CONSIDERED GROUNDS FOR ADDITIONAL PAYMENT OR CHANGES TO THE CONTRACT DURATION, OR ANY OTHER CLAIMS AGAINST THE OWNER OR OWNER'S ENGINEER.
3. THE CONTRACTOR SHALL, WHEN HE/SHE DEEMS NECESSARY, PROVIDE A WRITTEN REQUESTS FOR INFORMATION (RFI) TO THE OWNER AND/OR OWNER'S DESIGNATED REPRESENTATIVE, AND ENGINEER PRIOR TO THE CONSTRUCTION OF ANY SPECIFIC SITEWORK ITEM. THE (RFI) SHALL BE IN A FORM ACCEPTABLE TO OWNER AND/OR OWNER'S DESIGNATED REPRESENTATIVE, AND ENGINEER AND SHALL ALLOW FOR A MINIMUM OF THREE WORK DAYS FOR A WRITTEN REPLY. RFIS SHALL BE NUMBERED CONSECUTIVELY BY DATE SUBMITTED. THE CONTRACTOR SHALL BE SOLELY RESPONSIBLE FOR SITEWORK ITEMS CONSTRUCTED DIFFERENTLY THAN INTENDED OR AS DEPICTED ON THE PLANS.
4. INFORMATION RELATED TO ELEVATIONS AND PROPOSED UTILITIES (SUCH AS ROADWAY GRADES, INVERT ELEVATIONS, RIM ELEVATIONS, GRATE ELEVATIONS, BUILDING FINISHED FLOOR ELEVATIONS, ETC.) MAY BE FOUND IN MORE THAN ONE LOCATION IN THE CONTRACT DOCUMENTS. THE CONTRACTOR SHALL SUFFICIENTLY REVIEW ALL PLANS, PROFILES AND ANY OTHER INFORMATION IN THE CONTRACT DOCUMENTS FOR CONSISTENCIES OR DISCREPANCIES THAT ARE FOUND BY THE CONTRACTOR OR HIS ASSIGNS SHALL BE IMMEDIATELY BROUGHT TO THE ATTENTION OF THE OWNER AND ENGINEER IN WRITING, IN THE FORMAT OF AN RFI PRIOR TO BID.
5. THERE ARE ADDITIONAL NOTES, SPECIFICATIONS AND REQUIREMENTS CONTAINED THROUGHOUT THE PLAN SET AS WELL AS REFERENCES TO SPECIFICATIONS FROM APPLICABLE GOVERNING AUTHORITIES AND INDUSTRY STANDARDS. IT IS THE CONTRACTOR'S RESPONSIBILITY TO OBTAIN, REVIEW AND ADHERE TO ALL THESE DOCUMENTS.
6. CONTRACTOR IS SPECIFICALLY CAUTIONED THAT ALL CONSTRUCTION STAKEOUT FOR THIS PROJECT MUST BE COMPLETED FROM THE SITE SPECIFIC SURVEY CONTROL (HORIZONTAL AND VERTICAL) UPON WHICH THE DESIGN IS BASED. THE CONTRACTOR SHOULD NOT RELY ON OR RE-ESTABLISH SURVEY CONTROL BY GPS OR OTHER METHODS FOR USE IN CONSTRUCTION STAKEOUT OR ANY OTHER PURPOSE FOR THIS PROJECT. ANY DISCREPANCIES BETWEEN THE EXISTING HORIZONTAL OR VERTICAL DATA SHOWN ON THESE DRAWINGS AND THAT ENCOUNTERED IN THE FIELD MUST BE REPORTED TO THE DESIGN TEAM PRIOR TO CONSTRUCTION FOR RESOLUTION.

ACCESSIBILITY NOTES

1. WALKWAYS ALONG ACCESSIBLE ROUTES NOT TO EXCEED 5% RUNNING SLOPE OR 2% CROSS SLOPE.
2. ALL ADA PARKING SPACES AND PASSENGER LOADING ZONES SHALL NOT EXCEED 2% IN ANY DIRECTION.
3. ALL ADA EGRESSES SHALL BE FLUSH WITH ADJOINING MATERIAL UNLESS NOTED OTHERWISE.
4. ALL CURB RAMPS SHALL NOT EXCEED 1:12 RUNNING SLOPE OR 2% CROSS SLOPE.
5. CONTRACTOR SHALL CONFIRM FIELD CONDITIONS ARE CONSISTENT WITH CONSTRUCTION DOCUMENTS AND NOTIFY LANGAN, CT OF ANY COMPLIANCE ISSUES PRIOR TO CONSTRUCTION.

SANITARY SEWER NOTES

1. ALL CONSTRUCTION SHALL BE IN ACCORDANCE WITH METROPOLITAN DISTRICT STANDARDS AND SPECIFICATIONS.
2. "CALL BEFORE YOU DIG" – THE CONTRACTOR IS HEREBY REMINDED THAT TITLE 16, CHAPTER 293 OF THE CONNECTICUT GENERAL STATUTES REQUIRES NOTIFICATION OF THE UTILITY COMPANIES OF PENDING EXCAVATION AT OR NEAR PUBLIC UTILITIES. THE CONTRACTOR SHALL CALL 1-800-922-4455 AT LEAST 48 HOURS PRIOR TO BEGINNING THE EXCAVATION.
3. SANITARY SEWERS ARE FOR SANITARY SEWAGE ONLY. ALL STORM WATER, COOLING WATER, AND SUBSOIL DRAINAGE ARE EXCLUDED FROM SANITARY SEWERS BY DISTRICT ORDINANCES.
4. SANITARY SEWER DISCHARGES MUST MEET ALL APPLICABLE STATE, FEDERAL, METROPOLITAN DISTRICT AND LOCAL REGULATIONS. THIS MAY INCLUDE, BUT IS NOT LIMITED TO PERMITTING, SAMPLING AND REPORTING REQUIREMENTS.
5. SUBSOIL AND SURFACE DRAINAGE SHALL BE CONNECTED TO THE NEAREST STORM DRAIN OR WATERCOURSE, AS APPROVED BY THE APPROPRIATE AUTHORITY.
6. ALL FEDERAL AND STATE OSHA SAFETY STANDARDS MUST BE FOLLOWED DURING SEWER INSTALLATION AND TESTING, INCLUDING 29 CFR 1926.650 – 1926.652, THAT ADDRESS EXCAVATION WORK AND REQUIREMENTS FOR PROTECTIVE SYSTEMS.
7. THE CONTRACTOR SHALL FURNISH TO THE ENGINEER A MATERIALS LIST, FOR REVIEW AND APPROVAL, PRIOR TO THE INSTALLATION OF THE PROPOSED SEWER.
8. ELEVATIONS ARE BASED ON NAVD88 DATUM.
9. ALL SEWER PIPE AND APPURTENANCES SHALL BE STAKED (SURVEYED) OUT BY A PROFESSIONAL SURVEYOR LICENSED IN THE STATE OF CONNECTICUT. THE SURVEY SHALL INCLUDE AN OFFSET LINE EVERY EVEN FIFTY FEET (50'0"), BENCHES AND CUT SHEETS.
10. ANY PROPOSED WATER MAINS SHALL BE INSTALLED AFTER THE SANITARY SEWER.
11. WHENEVER POSSIBLE THE SANITARY SEWER SHALL BE LOCATED A MINIMUM OF TEN FEET (10'0") HORIZONTALLY FROM ANY EXISTING OR PROPOSED WATER MAIN. WHEN LOCAL CONDITIONS PREVENT THIS A LESSER DISTANCE IS ALLOWED IF (A) THE WATER MAIN IS IN A SEPARATE TRENCH, OR (B) IT IS LOCATED IN THE SAME TRENCH TO ONE SIDE ON A BENCH OF UNDISTURBED EARTH WITH AT LEAST TWELVE INCHES (12"), AND PREFERABLY EIGHTEEN INCHES (18") HORIZONTAL SEPARATION BETWEEN THE EDGES OF THE SEWER PIPE AND THE WATER MAIN. IN EITHER CASE, THE BOTTOM OF THE WATER MAIN SHALL BE EIGHTEEN INCHES ABOVE THE CROWN OF THE SEWER PIPE.
12. ANY CONFLICT BETWEEN THE PROPOSED SANITARY SEWER, EXISTING OR PROPOSED UTILITIES AND/OR STORM DRAINS WILL BE RESOLVED AT THE EXPENSE OF THE DEVELOPER.
13. ROADWAYS REQUIRING FILL SHALL HAVE A MINIMUM OF THREE FEET (3'0") OF ACCEPTABLE FILL PLACED ABOVE THE TOP OF THE PROPOSED PIPE ELEVATION OR TO ESTABLISHED GRADE, AND COMPACTED TO 95% DENSITY PRIOR TO INSTALLATION OF THE SANITARY SEWER.
14. TRENCH BACKFILL UNDER ROADWAYS AND WALKWAYS SHALL BE BANK RUN GRAVEL, SAND, OR ACCEPTABLE NATURAL SOIL, SATISFACTORY TO THE TOWN, CITY AND/OR STATE AUTHORITY HAVING JURISDICTION.
15. PRIOR TO PLACING BACKFILL, THE CRUSHED STONE FOUNDATION AND THE STONE HAUNCHING ALONG THE MAIN SEWER PIPES AND LATERALS SHALL BE WRAPPED IN A DISTRICT APPROVED FILTER FABRIC AND SHALL BE LAPPED CLOSED AT THE TOP A MINIMUM OF ONE FOOT (1'0"). THE FILTER FABRIC SHALL BE PLACED UNDER THE CRUSHED STONE FOUNDATION FOR MANHOLES AND EXTENDED ABOVE THE PIPE.
16. AFTER PLACING APPROXIMATELY TWO FEET (2'0") OF BACKFILL OVER ALL SEWER PIPING, THE CONTRACTOR SHALL PLACE A SIX-INCH WIDE STRIP OF DURABLE, NON-DETECTABLE COLOR CODED (GREEN FOR SANITARY SEWER AND STORM SEWER) UNDERGROUND UTILITY LOCATION TAPE IMPRINTED WITH AN APPROPRIATE WARNING INDICATING THE PRESENCE OF THE BURIED UTILITY CONDUIT.
17. THE CONTRACTOR IS RESPONSIBLE, AT HIS OWN EXPENSE, FOR VERIFYING FIELD COMPACTION OF BACKFILL UTILIZING AASHTO T180 METHOD D. TEST RESULTS MAY BE REQUIRED BY THE METROPOLITAN DISTRICT.
18. TEMPORARY AND PERMANENT PAVING RESTORATION SHALL BE IN ACCORDANCE WITH DISTRICT AND/OR TOWN AND/OR STATE SPECIFICATIONS.
19. THE SEWER LINE SHALL BE TESTED FOR LEAKAGE USING LOW PRESSURE AIR IN ACCORDANCE WITH SPECIFICATIONS FURNISHED BY THE METROPOLITAN DISTRICT. ANY SECTION OF PIPELINE FAILING THE TEST SHALL BE REPAIRED OR REPLACED AND RETESTED BEFORE INDIVIDUAL BUILDING CONNECTIONS WILL BE PERMITTED.
20. CLOSED CIRCUIT TELEVISION (CCTV) INSPECTION(S) SHALL BE DONE BY THE CONTRACTOR UPON COMPLETION OF THE SEWER, AND AGAIN AT THE END OF THE ONE-YEAR MAINTENANCE PERIOD AT THE DEVELOPER'S EXPENSE. A DISTRICT REPRESENTATIVE SHALL BE PRESENT DURING THE INSPECTIONS.
21. ALL SANITARY SEWER LATERALS SHALL BE A MINIMUM OF SIX INCHES (6") IN DIAMETER AND SHALL BE INSTALLED AT NOT LESS THAN TWO PERCENT (2%) GRADE. THE MAXIMUM GRADE ALLOWED SHALL BE TEN PERCENT (10%). LATERALS TO THE EDGE OF THE RIGHT-OF-WAY OR EASEMENT SHALL BE BUILT IN CONJUNCTION WITH THE MAIN SEWER CONSTRUCTION.
22. APPROVAL FOR THE SEWER IS FOR THE MAIN LINE ONLY. CONNECTIONS FROM THE LATERALS AT THE EDGE OF THE RIGHT-OF-WAY OR THE EDGE OF THE EASEMENT TO THE BUILDING(S) SHALL BE CONSTRUCTED UNDER INDIVIDUAL HOUSE CONNECTION PERMITS ISSUED BY THE CUSTOMER SERVICE DEPARTMENT OF THE METROPOLITAN DISTRICT, LOCATED AT 60 MURPHY ROAD, HARTFORD, CONNECTICUT.
23. ALL WORK SHALL FOLLOW STATE PLUMBING CODE TO INCLUDE INTERNAL INDIVIDUAL FIXTURE BACKFLOW PROTECTION.

★ POSSIBLE CONNECTION CHARGE OR OTHER MONETARY CHARGE IS DUE IN AN AMOUNT BASED UPON PREVAILING RATES IN EFFECT AT THE TIME OF THE HOUSE CONNECTION PERMIT.

✪ DEFERRED DEVELOPER'S OUTLET CHARGE IS DUE IN AN AMOUNT BASED UPON PREVAILING RATES IN EFFECT AT THE TIME OF ISSUANCE OF THE HOUSE CONNECTION PERMIT.

GENERAL NOTES

1. PLANIMETRIC AND TOPOGRAPHIC INFORMATION SHOWN HEREON HAS BEEN OBTAINED FROM PLAN TITLED "ALTA/NSPS LAND TITLE SURVEY (TOPOGRAPHIC SURVEY)" BY LANGAN, CT, DATED 09-20-2022 & 10-05-2022.
2. THE SITE LIES IN ZONE X (UNSHADED) AS SHOWN ON THE FEMA FLOOD INSURANCE RATE MAPS NUMBERED 09003C0315F AND 09003C0352F EFFECTIVE SEPTEMBER 26, 2008.
3. THE CONTRACTOR IS RESPONSIBLE FOR CONTACTING CALL BEFORE YOU DIG (WWW.CBYD.COM), PRIOR TO PERFORMING EXCAVATION TEST HOLES, TEST BORINGS, AND WHATEVER ADDITIONAL INVESTIGATION IS NECESSARY TO PROTECT AND MAINTAIN ALL EXISTING UTILITIES TO REMAIN THROUGHOUT THE CONSTRUCTION PERIOD. ANY CONFLICTS BETWEEN EXISTING UTILITIES AND PROPOSED UTILITIES DISCOVERED DURING CONSTRUCTION SHALL BE PROMPTLY REPORTED TO THE PROJECT ENGINEER.
4. SEE ARCHITECTURAL DRAWINGS FOR LOCATIONS, DIMENSIONS AND DETAILS OF ALL DOORS, RAMPS, SIDEWALKS AND WALLS ASSOCIATED WITH THE BUILDING.
5. ALL IMPROVEMENTS CONSTRUCTED IN THE TOWN PUBLIC RIGHT-OF-WAY SHALL CONFORM TO TOWN OF BLOOMFIELD STANDARD DETAILS. IN THE ABSENCE OF LOCAL DETAILS & REQUIREMENTS AND WORK IN THE STATE RIGHT-OF-WAY SHALL COMPLY WITH THE MOST UP TO DATE VERSION OF THE STATE OF CONNECTICUT DEPARTMENT OF TRANSPORTATION STANDARDS AND SPECIFICATIONS.
6. FOR AREAS OUTSIDE THE PROPERTY LINES, REPAIR AND/OR REPLACE ALL DAMAGE DONE TO EXISTING ELEMENTS (SIDEWALKS, PAVING, LANDSCAPING, ETC) AS REQUIRED BY OWNER AND/OR GOVERNING AUTHORITY.
7. ALL SIGNS AND PAVEMENT MARKINGS SHALL CONFORM TO THE LATEST EDITION OF THE MUTCD AND CONNECTICUT DEPARTMENT OF TRANSPORTATION REGULATIONS.
8. CONTRACTOR SHALL PREVENT DUST, SEDIMENT AND DEBRIS FROM EXITING THE SITE AND SHALL BE RESPONSIBLE FOR CLEANUP, REPAIRS AND CORRECTIVE ACTION IF SUCH OCCURS. ADJOINING STREETS AND PROPERTIES TO BE KEPT FREE OF DEBRIS RESULTING FROM DEMOLITION AND SHALL BE CLEANED ON A DAILY BASIS OR AS NEEDED.
9. DUST CONTROL TREATMENTS SHALL BE APPLIED AS NECESSARY TO CONTROL AND REDUCE THE AMOUNT OF DUST WHICH MAY CAUSE OFF-SITE DAMAGE, BE A HEALTH HAZARD TO HUMANS, WILDLIFE AND PLANT LIFE, OR POSE A HAZARD TO TRAFFIC SAFETY.
10. ABBREVIATIONS:

ARCH. = ARCHITECTURAL	R.O.W = RIGHT OF WAY
CONC. = CONCRETE	CO = CLEAN OUT
INV = INVERT	DIP = DUCTILE IRON PIPE
EX = EXISTING	PVC = POLYVINYL CHLORIDE PIPE
HDPE = HIGH DENSITY POLYETHYLENE PIPE	OCS = OUTLET CONTROL STRUCTURE
PR. = PROPOSED	RCP = REINFORCED CONCRETE PIPE
R&D = REMOVE & DISPOSE	LF = LINEAR FEET
R&R = REMOVE & REPLACE	RL = ROOF LEADER
TYP. = TYPICAL	TC = TOP OF CURB
SWL = SINGLE WHITE LINE	BC = BOTTOM OF CURB
SYL = SINGLE YELLOW LINE	TW = TOP OF WALL
BW = BOTTOM OF WALL	MH = MANHOLE
HP = HIGHPOINT	LA = LANDSCAPED AREA
GR = TOP OF GRATE	N.T.S. = NOT TO SCALE
INV = INVERT	LF = LINEAR FEET
SAN MH = SANITARY SEWER MANHOLE	CB = CATCH BASIN
FFE = FINISHED FLOOR ELEVATION	YD = YARD DRAIN
	FES = FLAIRED END SECTION

14. THE LOCATION OF EXISTING UNDERGROUND UTILITIES SHOWN HEREON IS TAKEN FROM DESIGN PLANS, AS-BUILT SKETCHES, EXISTING UTILITY COMPANY RECORDS, AND OTHER SOURCES OF INFORMATION AND IS NOT TO BE CONSTRUED AS AN ACCURATE "AS-BUILT" SURVEY AND IS SUBJECT TO SUCH CORRECTIONS THAT A MORE ACCURATE SURVEY MAY DISCLOSE.
15. THE EXISTING UTILITIES INDICATED HEREON MAY NOT BE LOCATED AS SHOWN. IN ADDITION, OTHER UTILITIES NOT SHOWN HEREON MAY BE PRESENT. ANY DISCREPANCIES DISCOVERED DURING THE COURSE OF CONSTRUCTION SHALL BE PROMPTLY REPORTED TO THE PROJECT ENGINEER.
16. ALL UTILITY WORK SHALL BE PERFORMED IN ACCORDANCE WITH THE REQUIREMENTS AND SPECIFICATIONS/DETAILS OF THE UTILITY COMPANY HAVING AUTHORITY OVER THE PROPOSED WORK. ALL PROPOSED UTILITY WORK SHALL BE PERFORMED IN ACCORDANCE WITH ALL APPLICABLE LOCAL, STATE, AND FEDERAL ORDINANCES/REQUIREMENTS GOVERNING THE PROPOSED WORK.
17. ANY UTILITY EASEMENTS REQUIRED BY ANY OF THE VARIOUS UTILITY COMPANIES SHALL BE OBTAINED, EXECUTED, AND RECORDED PRIOR TO ANY OF THE AFFECTED UTILITY WORK BEING PERFORMED.
18. ALL PROPOSED UTILITIES WILL BE LOCATED UNDERGROUND.
19. ALL PROPOSED STORM DRAINAGE PIPING TO UTILIZE WATER-TIGHT JOINTS.
20. CLEANOUTS SHALL BE PROVIDED FLUSH TO GRADE AT ALL LOCATIONS OF ROOF DRAIN INTERSECTIONS, BENDS AND UPSTREAM ENDS.
21. THE CONTRACTOR SHALL BE RESPONSIBLE FOR PROPERLY SIZING ALL DRAINAGE STRUCTURES AND SUBMITTING SHOP DRAWINGS TO ENGINEER FOR REVIEW.
22. THE CONTRACTOR SHALL BE RESPONSIBLE FOR ALL PAVEMENT REPAIRS REQUIRED AS A RESULT OF ANY UTILITY WORK.
23. ALL PAVEMENT MARKINGS SHALL BE EPOXY RESIN PAINT.
24. ALL RADII ARE 3 FEET UNLESS OTHERWISE NOTED.
25. GRADING IN VEHICLE AREAS SHALL BE WITHIN THE FOLLOWING TOLERANCE:
    25.1. DOCK APRON – 1.0%
    25.2. TRUCK COURT: 1.0% MIN – 3.5% MAX
    25.3. DRIVEWAYS: 1.0% MIN – 8.0% MAX
26. CONCRETE JOINTS ON SITE ARE TO BE FILLED WITH ½" ISOLATION JOINT FILLER, TO INCLUDE CONCRETE PAVEMENTS, MONOLITHIC CURBING, AND MONOLITHIC SIDEWALKS.
27. BOTTOM AND TOP OF RETAINING WALL ELEVATION SPOT SHOTS REPRESENT THE BASE OF THE WALL AT FINISHED GROUND LEVEL AND THE TOP OF THE FACE OF THE WALL RESPECTIVELY.
28. SPOT SHOTS ALONG CURB LINES REPRESENT THE BASE OF THE CURB UNLESS NOTED OTHERWISE.
29. ALL ON-SITE CONCRETE TO BE 4,500 PSI WITH 5% TO 7% AIR ENTRAPMENT UNLESS OTHERWISE NOTED.
30. TRANSFORMERS, HVAC UNITS, DUMPSTER AND SIMILAR SITE INSTALLATIONS MUST BE APPROPRIATELY SCREENED TO THE SATISFACTION OF THE PLANNING DEPARTMENT.
31. UPON COMPLETION OF CONSTRUCTION, THE OWNER SHALL SUBMIT "AS-BUILT" PLANS FOR THE STORMWATER MANAGEMENT SYSTEM, CERTIFIED BY A PROFESSIONAL ENGINEER LICENSED IN THE STATE OF CONNECTICUT, STATING THAT THE STORMWATER MANAGEMENT SYSTEM WAS INSTALLED IN ACCORDANCE WITH THE APPROVED STORMWATER MANAGEMENT PLAN.
32. CONTRACTOR TO REMOVE ALL AGRICULTURAL PLASTIC SHEERING, IRRIGATION TUBING AND SIMILAR MATERIAL FROM THE SITE AND DISPOSE IN ACCORDANCE WITH ALL LOCAL AND STATE REGULATIONS. CONTRACTOR TO REMOVE EXISTING BERMS AND SMALL PILES OF MATERIAL FROM EDGES OF FIELDS AND GRAD TO BLEND SMOOTHLY INTO ADJACENT TOPOGRAPHY.
33. THE FLAGGED WETLANDS DEPICTED HEREON HAVE BEEN DELINEATED BY ALL POINTS TECHNOLOGY CORPORATION ON SEPTEMBER 8, 2022 AND SEPTEMBER 12, 2022.

WATER NOTES

1. ALL CONSTRUCTION SHALL BE IN ACCORDANCE WITH METROPOLITAN DISTRICT STANDARDS AND SPECIFICATIONS.
2. WATER MAIN TO BE INSTALLED IN ACCORDANCE WITH THE METROPOLITAN DISTRICT'S "DEVELOPERS MANUAL FOR WATER MAIN DESIGN AND INSTALLATION STANDARDS."
3. "CALL BEFORE YOU DIG" – THE CONTRACTOR IS HEREBY REMINDED THAT TITLE 16, CHAPTER 293 OF THE CONNECTICUT GENERAL STATUTES REQUIRES NOTIFICATION OF THE UTILITY COMPANIES OF PENDING EXCAVATION AT OR NEAR PUBLIC UTILITIES. THE CONTRACTOR SHALL CALL 1-800-922-4455 AT LEAST 48 HOURS PRIOR TO BEGINNING THE EXCAVATION.
4. ALL FEDERAL AND STATE OSHA SAFETY STANDARDS MUST BE FOLLOWED DURING WATER MAIN INSTALLATIONS AND TESTING, INCLUDING 29 CFR 1926.650 – 1926.652, THAT ADDRESS EXCAVATION WORK AND REQUIREMENTS FOR PROTECTIVE SYSTEMS.
5. TEST PITS SHALL BE DUG WELL IN ADVANCE OF THE WATER MAIN INSTALLATION TO DETERMINE POSSIBLE OFFSETS ABOVE OR BELOW OTHER UTILITIES, STRUCTURES OR OBSTACLES.
6. EXTREME CARE MUST BE EXERCISED BY THE CONTRACTOR TO PROTECT EXISTING SANITARY SEWERS, SANITARY SEWER LATERALS, STORM DRAINS AS WELL AS OTHER UTILITIES DURING CONSTRUCTION.
7. THE CONTRACTOR SHALL FURNISH TO THE ENGINEER A MATERIALS LIST, FOR APPROVAL, PRIOR TO THE INSTALLATION OF THE PROPOSED WATER MAIN.
8. ELEVATIONS ARE BASED ON NAVD88 DATUM.
9. ALL WATER MAIN AND APPURTENANCES SHALL BE STAKED (SURVEYED) OUT BY A PROFESSIONAL SURVEYOR LICENSED IN THE STATE OF CONNECTICUT. THE SURVEY SHALL INCLUDE AN OFFSET LINE OR STREET LINE EVERY FIFTY FEET (50'0"), FINAL ROAD OR SURFACE ELEVATION.
10. TEST PRESSURE SHALL BE 150 PSI, AS CONFIRMED BY THE METROPOLITAN DISTRICT INSPECTOR ON SITE.
11. GATE OPERATIONS FOR THIS PROJECT SHALL BE "OPEN LEFT".
12. HYDRANT LOCATIONS ARE SUBJECT TO THE APPROVAL OF THE TOWN FIRE MARSHAL.
13. MINIMUM DEPTH OF COVER OVER PROPOSED WATER MAIN SHALL BE 4.5 FEET AS MEASURED FROM THE UNDERSIDE OF THE PAVEMENT TO THE TOP OF THE PIPE.
14. ALL WATER MAINS SHALL BE CLASS 54 ANSI/AWWA C151/A21.51-81 DUCTILE IRON PIPE CENTRIFUGALLY CAST IN METAL MOLDS OR SAND LINED MOLDS FOR WATER OR OTHER LIQUIDS.
15. WHERE ROCK IS ENCOUNTERED DURING THE INSTALLATION OF THE PROPOSED WATER MAIN, THE PROPOSED MAIN SHALL BE LAID ON A PRE-COMPACTED BED OF APPROVED MATERIAL, A MINIMUM SIX INCHES (6") IN DEPTH.
16. ALL FITTINGS, UNLESS OTHERWISE SPECIFIED, SHALL BE MECHANICAL JOINT AND SHALL BE INSTALLED WITH RESTRAINT IN EACH DIRECTION.
17. WHERE RESTRAINT IS INDICATED, APPROVED RETAINER GLANDS OR RODDING MAY BE UTILIZED.
18. WHERE "PULLING" OR DEFLECTING PIPE IS INDICATED, SUCH DEFLECTION SHALL BE DONE IN ACCORDANCE WITH THE RECOMMENDATIONS OF "THE DIPRA HANDBOOK." IN NO CASE SHOULD THE DEFLECTION BE GREATER THAN FIVE DEGREES.
19. ALL GATE VALVES, AIR VALVES AND BLOWOFFS SHALL BE INSTALLED COMPLETE WITH DISTRICT APPROVED GATE BOXES AND APPURTENANCES UNLESS OTHERWISE NOTED.
20. GATE NUT EXTENSION STEMS REQUIRED WHERE GATE VALVE NUTS ARE PLACED AT A DEPTH GREATER THAN 4.5 FEET BELOW FINAL GRADE.
21. CONCRETE COLLARS FOR FIRE HYDRANTS SHALL BE INSTALLED PRIOR TO THE METROPOLITAN DISTRICT PLACING THE WATER MAIN INTO SERVICE.
22. MAINTAIN A MINIMUM DISTANCE OF 10 FEET (10'0") HORIZONTAL BETWEEN THE WATER MAIN AND ANY EXISTING OR PROPOSED SANITARY SEWER. WHEN LOCAL CONDITIONS PREVENT THIS, A LESSER DISTANCE IS ALLOWED IF (A) THE WATER MAIN IS IN A SEPARATE TRENCH, OR (B) IT IS LOCATED IN THE SAME TRENCH TO ONE SIDE ON A BENCH OF UNDISTURBED EARTH WITH AT LEAST TWELVE INCHES (12"), AND PREFERABLY EIGHTEEN INCHES (18") HORIZONTAL SEPARATION BETWEEN THE EDGES OF THE SEWER PIPE AND THE WATER MAIN. IN EITHER CASE, THE BOTTOM OF THE WATER MAIN SHALL BE EIGHTEEN INCHES ABOVE THE CROWN OF THE SEWER PIPE.
23. WHERE THE WATER MAIN IS TO BE INSTALLED BELOW DRAIN PIPE, MAINTAIN A MINIMUM OF 18 INCHES BETWEEN THE BOTTOM OF STORM DRAIN AND THE CROWN OF THE WATER MAIN.
24. ANY CONFLICT BETWEEN THE PROPOSED WATER MAIN, EXISTING OR PROPOSED UTILITIES AND/OR STORM DRAINS SHALL BE RESOLVED AT THE EXPENSE OF THE DEVELOPER.
25. AFTER PLACING APPROXIMATELY TWO FEET (2'0") OF BACKFILL MATERIAL OVER THE WATER MAIN, THE CONTRACTOR SHALL PLACE A SIX-INCH WIDE STRIP OF DURABLE, NON-DETECTABLE, COLOR CODED (BLUE FOR WATER) UNDERGROUND UTILITY DETECTION TAPE IMPRINTED WITH THE APPROPRIATE WARNING INDICATING THE PRESENCE OF A BURIED UTILITY CONDUIT.
26. TRENCH BACKFILL UNDER ROADWAYS AND WALKWAYS SHALL BE BANK RUN GRAVEL, SAND, OR ACCEPTABLE NATIVE SOIL SATISFACTORY TO THE TOWN, CITY OR AND/OR STATE AUTHORITY HAVING JURISDICTION.
27. ROADWAYS REQUIRING FILL SHALL HAVE A MINIMUM OF THREE FEET (3'0") OF ACCEPTABLE FILL PLACED ABOVE THE TOP OF THE PROPOSED PIPE ELEVATION OR TO ESTABLISHED GRADE, AND COMPACTED TO 95% DENSITY PRIOR TO INSTALLATION OF THE WATER MAIN.
28. TEMPORARY AND PERMANENT PAVING RESTORATION SHALL BE MADE IN ACCORDANCE WITH DISTRICT AND/OR TOWN AND/OR STATE SPECIFICATIONS.
29. CHLORINATION BY INJECTION METHOD AND DECHLORINATION ARE THE RESPONSIBILITY OF THE CONTRACTOR. THE CONTRACTOR SHALL ABIDE BY THE DISTRICT'S STANDARDS FOR DISINFECTING WATER MAINS, INCLUDING PROPERLY NEUTRALIZING THE CHLORINATED WATER AND DISCHARGING THE WATER ACCORDINGLY. ALL WORK TO BE COORDINATED WITH THE METROPOLITAN DISTRICT.
30. APPROVAL FOR THE WATER IS FOR THE MAIN LINE ONLY. INDIVIDUAL PERMITS FOR DOMESTIC AND FIRE SERVICES SHALL BE OBTAINED AT THE CUSTOMER SERVICE DEPARTMENT, 60 MURPHY ROAD, HARTFORD, CONNECTICUT.
31. ALL WEDGE VALVES SHALL BE REMOVED UPON COMPLETION OF WATER MAINS UNLESS OTHERWISE INSTRUCTED TO REMAIN AND/OR TO BE CONVERTED.
32. CONTRACTOR SHALL CALL MDC SYSTEMS REPAIR (860-278-7850 EXT. 3627) AFTER JOB CONFERENCE WITH DISTRICT TO SCHEDULE ANY REQUIRED TAPS OF MDC WATER MAINS. POSSIBLE MONETARY CHARGE IS DUE IN AN AMOUNT BASED UPON PREVAILING RATES IN EFFECT AT THE TIME OF ISSUANCE OF THE WATER SERVICE PERMIT.

UTILITY NOTES

GENERAL

1. THE SITE CONTRACTOR IS SPECIFICALLY CAUTIONED THAT THE LOCATION AND/OR ELEVATION OF EXISTING UTILITIES AS SHOWN ON THESE PLANS IS BASED ON RECORDS OF THE VARIOUS UTILITY COMPANIES, AND WHERE POSSIBLE, MEASUREMENTS TAKEN IN THE FIELD. THE INFORMATION IS NOT TO BE RELIED UPON AS BEING EXACT OR COMPLETE. THE SITE CONTRACTOR MUST CONTACT "CALL-BEFORE-YOU-DIG" (800-922-4455) FOR THE LOCATION AND MARKING OF ALL EXISTING UTILITIES PRIOR TO ANY EXCAVATION. IT SHALL BE THE RESPONSIBILITY OF THE SITE CONTRACTOR TO RELOCATE ALL UTILITIES WHICH CONFLICT WITH THE PROPOSED IMPROVEMENTS SHOWN ON THE PLANS
2. THE SITE CONTRACTOR SHALL FIELD VERIFY ALL EXISTING CONDITIONS, UTILITY LOCATIONS, AND INVERTS PRIOR TO CONSTRUCTION. ANY CONDITIONS FOUND TO DIFFER FROM THOSE SHOWN BY THE DRAWINGS SHALL BE IMMEDIATELY BROUGHT TO THE ATTENTION OF THE PROJECT ENGINEER.
3. SITE CONTRACTOR SHALL REFER TO ARCHITECTURAL PLANS AND SPECIFICATIONS FOR ACTUAL LOCATIONS OF ALL UTILITY ENTRANCES TO THE BUILDING(S) INCLUDE SANITARY SEWER LATERALS, DOMESTIC AND FIRE PROTECTION WATER SERVICE, ELECTRICAL, TELEPHONE AND GAS SERVICE, ROOF DRAINS, AND ALL OTHER UTILITIES. SITE CONTRACTOR SHALL COORDINATE INSTALLATION OF UTILITIES IN SUCH A MANNER AS TO AVOID CONFLICTS AND TO ENSURE PROPER DEPTHS ARE ACHIEVED AS WELL AS COORDINATING WITH THE REGULATORY AGENCY AS TO LOCATION OF AND SCHEDULING OF CONNECTIONS TO THEIR FACILITIES.
4. THE SITE CONTRACTOR SHALL BE RESPONSIBLE FOR NOTIFYING UTILITY COMPANIES 72 HOURS PRIOR TO BEGINNING EXCAVATION.
5. THE SITE CONTRACTOR SHALL BE RESPONSIBLE FOR OBTAINING ALL NECESSARY PERMITS AND ALL PAVEMENT REPAIRS REQUIRED AS A RESULT OF ANY UTILITY WORK.

ELECTRIC, TELEPHONE & GAS

1. SITE CONTRACTOR TO COORDINATE GAS MAIN, ELECTRIC, AND TELEPHONE INSTALLATION WITH APPROPRIATE UTILITY COMPANIES.
2. SITE CONTRACTOR SHALL MAINTAIN A MINIMUM OF 2 FEET OF COVER FOR ALL UNDERGROUND ELECTRIC, TELEPHONE AND GAS UTILITIES.

GRADING & DRAINAGE NOTES

1. THE SITE CONTRACTOR IS SPECIFICALLY CAUTIONED THAT THE LOCATION AND/OR ELEVATION OF EXISTING UTILITIES AS SHOWN ON THESE PLANS IS BASED ON RECORDS OF THE VARIOUS UTILITY COMPANIES, AND WHERE POSSIBLE, MEASUREMENTS TAKEN IN THE FIELD. THE INFORMATION IS NOT TO BE RELIED UPON AS BE

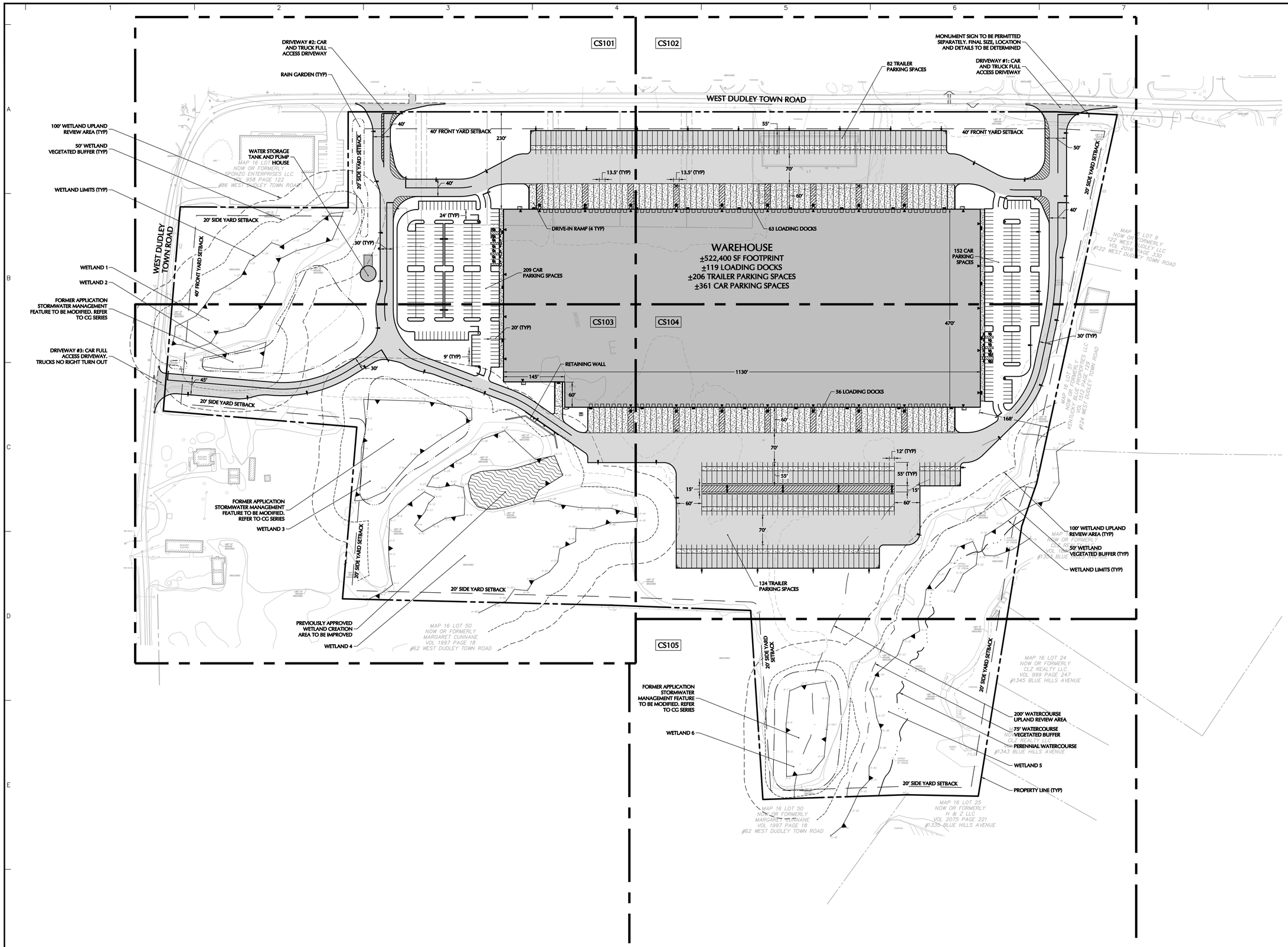

FOR PERMITTING ONLY, NOT FOR CONSTRUCTION

Date	Description	No.

Revisions

STATE OF CONNECTICUT
DANIEL T. GIGLIO
No. 28290
LICENSED
PROFESSIONAL ENGINEER

LANGAN
Langan Engineering and Environmental Services, Inc.
555 Long Wharf Drive
New Haven, CT 06511
T: 203.562.5771 F: 203.789.6142 www.langan.com

Project
NORTH BLOOMFIELD COMMERCE CENTER
116 WEST DUDLEY TOWN ROAD
MAP 16, LOT 43
BLOOMFIELD CONNECTICUT

APPLICANT/DEVELOPER:
NORTHPOINT DEVELOPMENT
3315 NORTH OAK TRAFFICWAY
KANSAS CITY, MO 64116

SUBMISSION PURPOSE: INLAND WETLANDS AND WATERCOURSES COMMISSION PERMIT APPLICATION

Drawing Title
OVERALL SITE PLAN

Project No. 140255601
Date 12/08/2022
Drawn By JMGM
Checked By DTG
Drawing No. CS100

LANGAN
Project No. 140255601

© 2022 Langan

Date: 12/7/2022 Time: 19:50 User: afedus Style Table: Langan.stb Layout: CS100 Document Code: 140255601-0501-CS101-0101

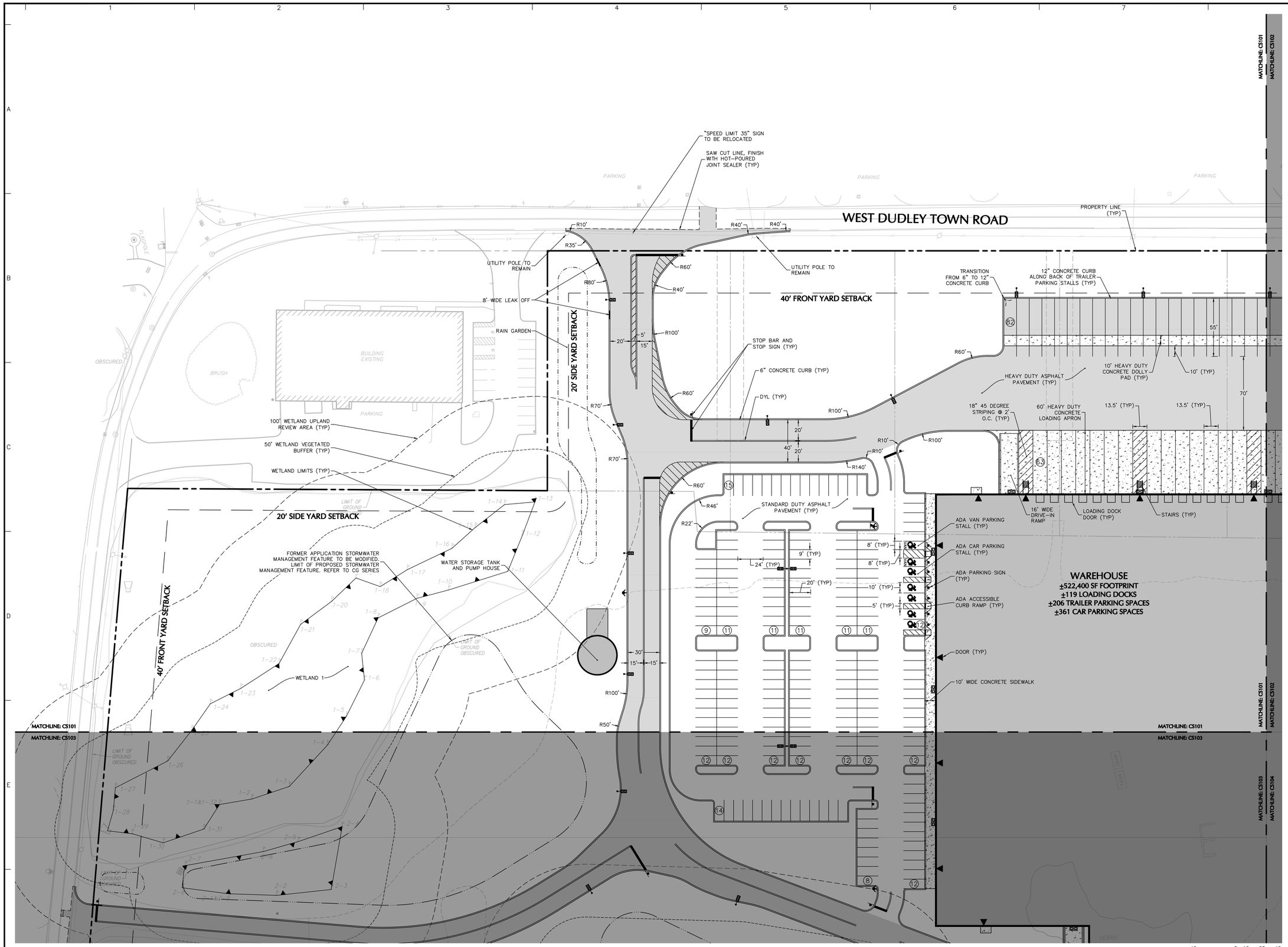

FOR PERMITTING ONLY, NOT FOR CONSTRUCTION

CT NAD 83

SHEET LEGEND

1" = 1,000'

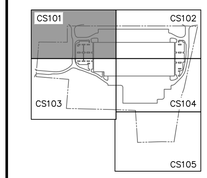

Date	Description	No.

Revisions

STATE OF CONNECTICUT DANIEL T. GIGLIOTTI No. 23,800 LICENSED PROFESSIONAL ENGINEER

LANGAN
Langan Engineering and Environmental Services, Inc.
555 Long Wharf Drive
New Haven, CT 06511
T: 203.562.5771 F: 203.789.6142 www.langan.com

Project

NORTH BLOOMFIELD COMMERCE CENTER
116 WEST DUDLEY TOWN ROAD
MAP 16, LOT 43

BLOOMFIELD CONNECTICUT

APPLICANT/DEVELOPER:
NORTHPOINT DEVELOPMENT
3315 NORTH OAK TRAFFICWAY
KANSAS CITY, MO 64116

SUBMISSION PURPOSE: INLAND WETLANDS AND WATERCOURSES COMMISSION PERMIT APPLICATION

Drawing Title

SITE PLAN I

Project No.	Drawing No.
140255601	CS101
Date: 12/08/2022	
Drawn By: JMGM	
Checked By: DTG	

Project No. 140255601

LANGAN

© 2022 Langan

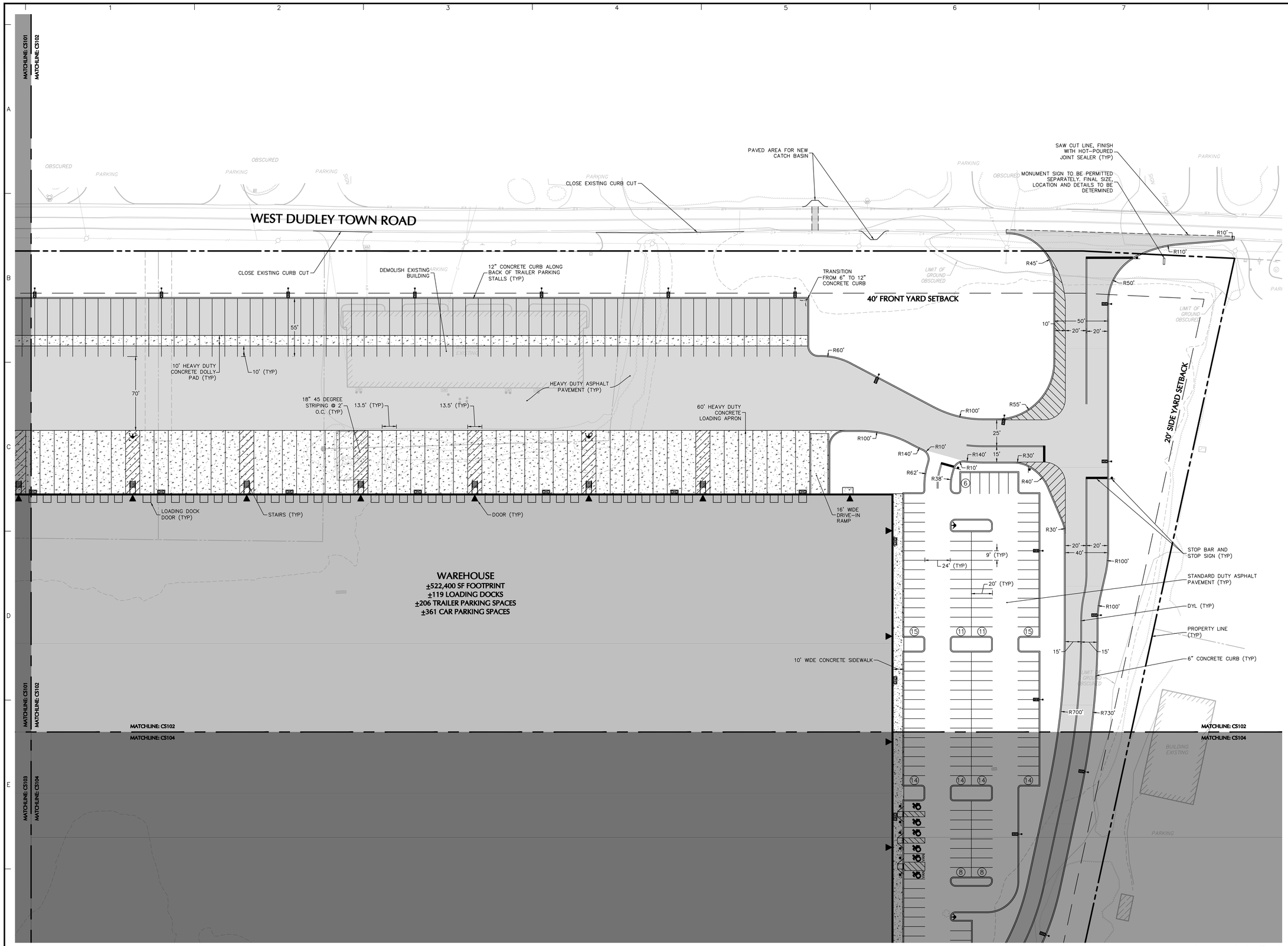

SHEET LEGEND

1" = 1,000'

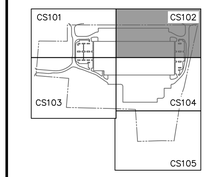

Date	Description	No.

Revisions

LANGAN

Langan Engineering and Environmental Services, Inc.

555 Long Wharf Drive
New Haven, CT 06511

T: 203.562.5771 F: 203.789.6142 www.langan.com

Project

NORTH BLOOMFIELD COMMERCE CENTER

116 WEST DUDLEY TOWN ROAD
MAP 16, LOT 43

BLOOMFIELD CONNECTICUT

APPLICANT/DEVELOPER:
NORTHPOINT DEVELOPMENT
3315 NORTH OAK TRAFFICWAY
KANSAS CITY, MO 64116

SUBMISSION PURPOSE: INLAND WETLANDS AND WATERCOURSES COMMISSION PERMIT APPLICATION

Drawing Title

SITE PLAN II

Project No.	Drawing No.
140255601	CS102
Date: 12/08/2022	
Drawn By: JMGM	
Checked By: DTG	

FOR PERMITTING ONLY, NOT FOR CONSTRUCTION

LANGAN

Project No. 140255601

© 2022 Langan

Date: 12/7/2022 Time: 19:51 User: afedus Style Table: Langan.stb Layout: CS102 Document Code: 140255601-0501-CS101-0103

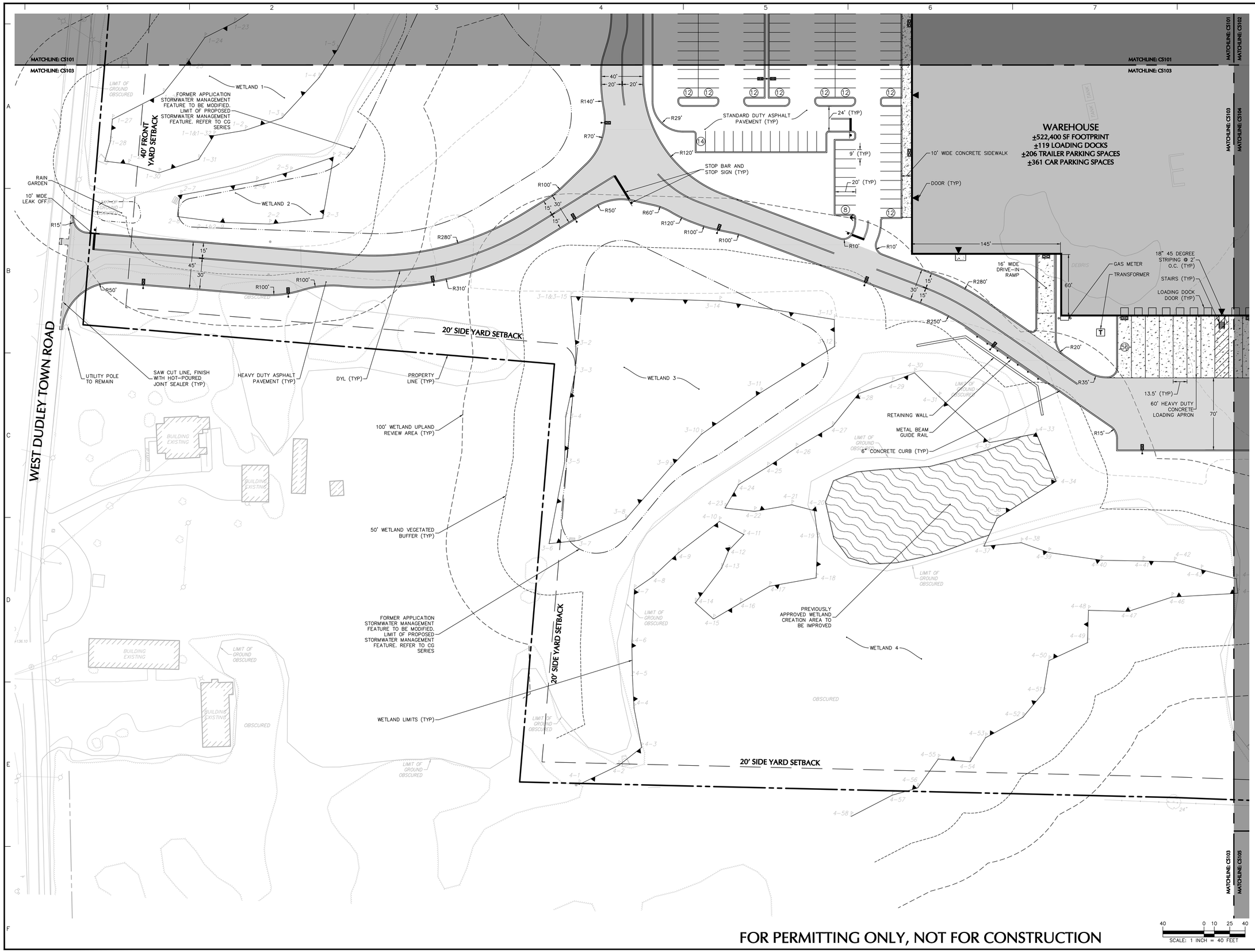

FOR PERMITTING ONLY, NOT FOR CONSTRUCTION

CT NAD 83

SHEET LEGEND

1" = 1,000'

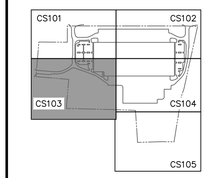

Date	Description	No.

Revisions

LANGAN
Langan Engineering and Environmental Services, Inc.
555 Long Wharf Drive
New Haven, CT 06511
T: 203.562.5771 F: 203.789.6142 www.langan.com

Project

NORTH BLOOMFIELD COMMERCE CENTER

116 WEST DUDLEY TOWN ROAD
MAP 16, LOT 43

BLOOMFIELD CONNECTICUT

APPLICANT/DEVELOPER:
NORTHPOINT DEVELOPMENT
3315 NORTH OAK TRAFFICWAY
KANSAS CITY, MO 64116

SUBMISSION PURPOSE: INLAND WETLANDS AND WATERCOURSES COMMISSION PERMIT APPLICATION

Drawing Title

SITE PLAN III

Project No.	Drawing No.
140255601	CS103
Date: 12/08/2022	
Drawn By: JMGM	
Checked By: DTG	

Project No. 140255601

© 2022 Langan

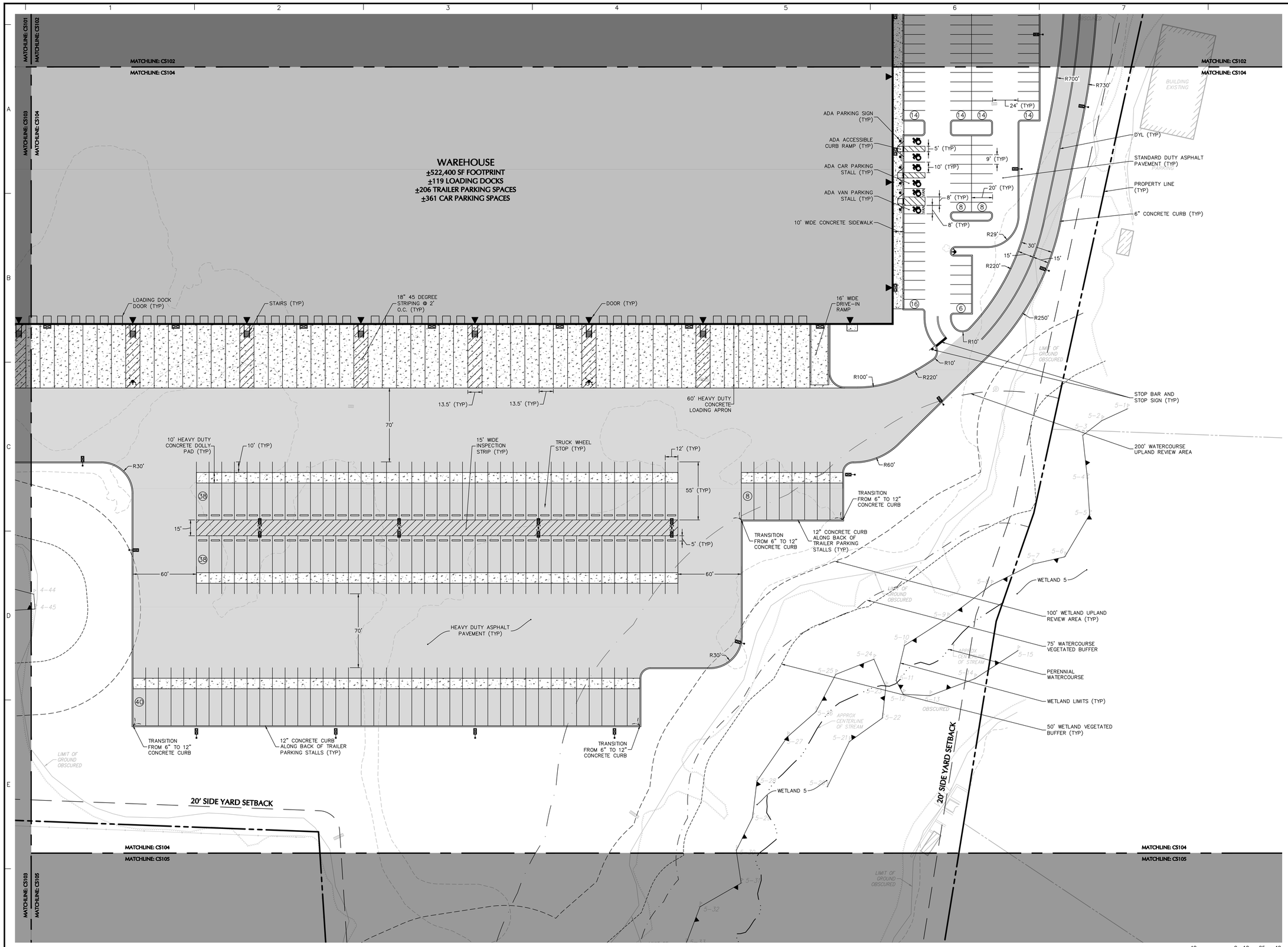

SHEET LEGEND

1" = 1,000'

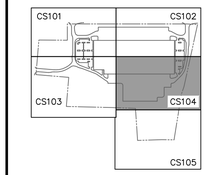

Date	Description	No.

Revisions

LANGAN

Langan Engineering and Environmental Services, Inc.

555 Long Wharf Drive
New Haven, CT 06511

T: 203.562.5771 F: 203.789.6142 www.langan.com

Project

NORTH BLOOMFIELD COMMERCE CENTER

116 WEST DUDLEY TOWN ROAD
MAP 16, LOT 43

BLOOMFIELD CONNECTICUT

APPLICANT/DEVELOPER:
NORTHPOINT DEVELOPMENT
3315 NORTH OAK TRAFFICWAY
KANSAS CITY, MO 64116

SUBMISSION PURPOSE: INLAND WETLANDS AND WATERCOURSES COMMISSION PERMIT APPLICATION

Drawing Title

SITE PLAN IV

Project No.	Drawing No.
140255601	CS104
Date: 12/08/2022	
Drawn By: JMGM	
Checked By: DTG	

FOR PERMITTING ONLY, NOT FOR CONSTRUCTION

LANGAN

Project No. 140255601

© 2022 Langan

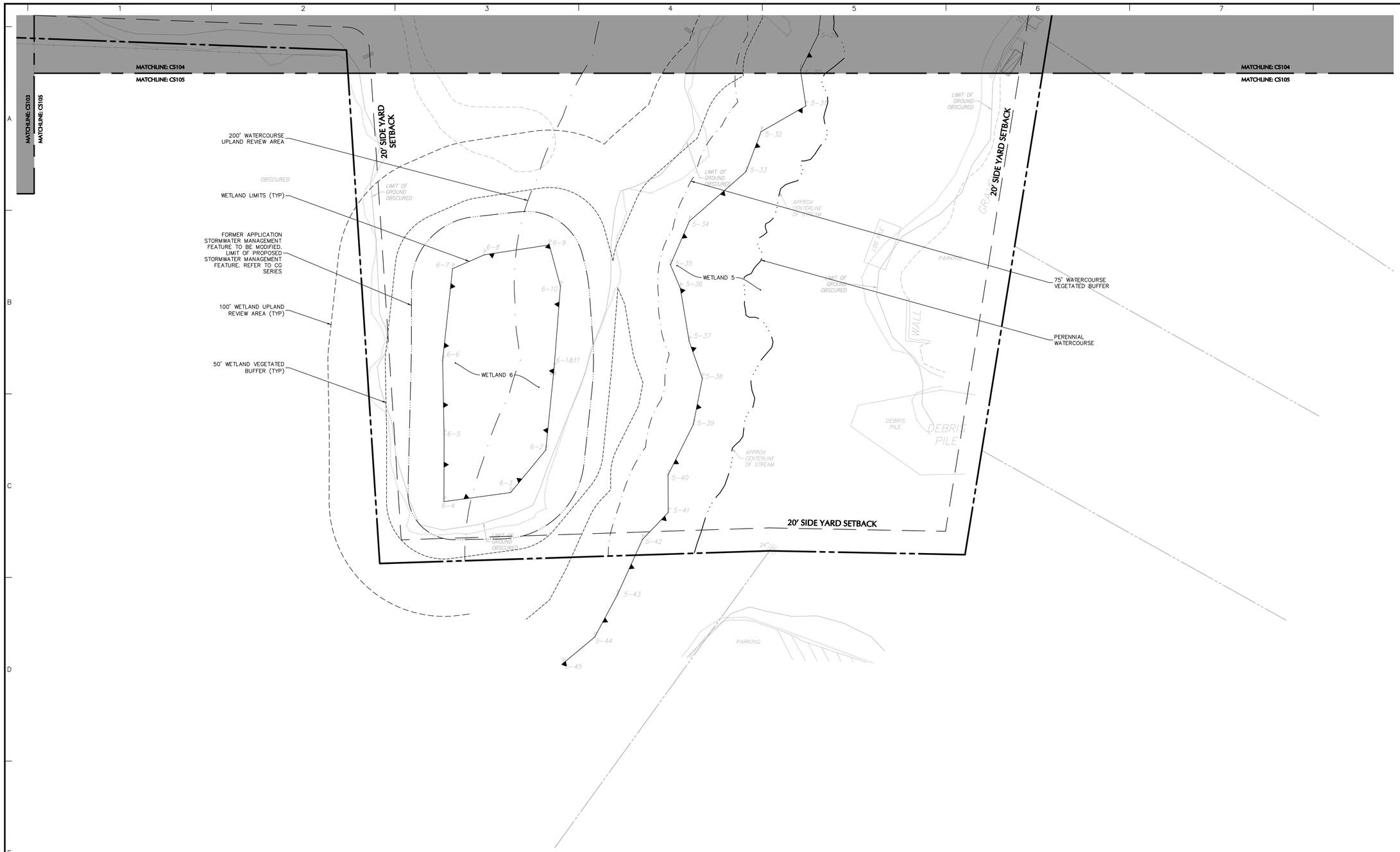

SHEET LEGEND

1" = 1,000'

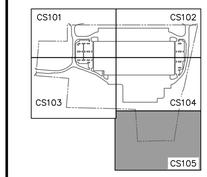

Date	Description	No.

Revisions

LANGAN

Langan Engineering and Environmental Services, Inc.

555 Long Wharf Drive
New Haven, CT 06511

T: 203.562.5771 F: 203.789.6142 www.langan.com

Project

NORTH BLOOMFIELD COMMERCE CENTER

116 WEST DUDLEY TOWN ROAD
MAP 16, LOT 43

BLOOMFIELD CONNECTICUT

APPLICANT/DEVELOPER:
NORTHPOINT DEVELOPMENT
3315 NORTH OAK TRAFFICWAY
KANSAS CITY, MO 64116

SUBMISSION PURPOSE: INLAND WETLANDS AND WATERCOURSES COMMISSION PERMIT APPLICATION

Drawing Title

SITE PLAN V

Project No.	Drawing No.
140255601	CS105
Date: 12/08/2022	
Drawn By: JMGM	
Checked By: DTG	

FOR PERMITTING ONLY, NOT FOR CONSTRUCTION

40 0 10 25 40
SCALE: 1 INCH = 40 FEET

LANGAN

Project No. 140255601

© 2022 Langan

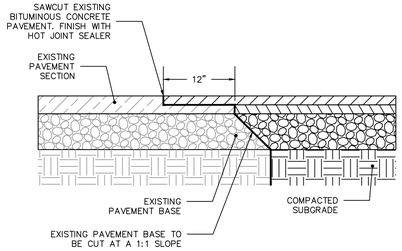

NOTES:
1. CONTRACTOR TO INSTALL TACK COAT ON ALL BUTT EDGES OF EXISTING PAVEMENT.

1 SAW CUT PAVEMENT SECTION
N.T.S.

ASPHALT SECTION	SURFACE COURSE - 'W'	BINDER COURSE - 'X'	BASE - 'Y'	SUBBASE - 'Z'
STANDARD DUTY	1.5 INCHES	1.5 INCHES	6 INCHES	6 INCHES
HEAVY DUTY	1.5 INCHES	4 INCHES	6 INCHES	6 INCHES

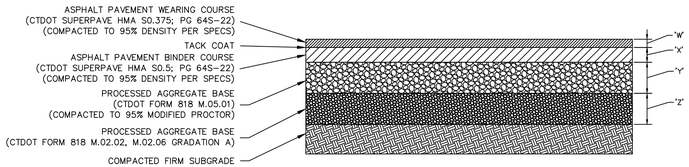

NOTES:
1. PRIOR TO ANY PAVING ACTIVITIES, THE SUBGRADE OR SUBBASE SHALL BE PROOF ROLLED.
2. PAVING BASECOURSE SHALL BE CONSTRUCTED IN LAYERS NOT LESS THAN 2 INCHES AND NOT MORE THAN 5 INCHES THICK PER LIFT.
3. ALL AREAS TO BE PAVED SHALL BE PROOFROLLED WITH AT LEAST 4 PASSES OF EITHER A SMOOTH ROLLER HAVING A MINIMUM STATIC DRUM WEIGHT OF 5-TONS OR A FULLY LOADED TANDEM DUMP TRUCK. ANY SOFT AREAS SHALL BE REMOVED AND REPLACED WITH CLEAN, GRANULAR, FREE-DRAINING SOIL. FILL SHALL BE PLACED IN LOOSE LIFTS NOT TO EXCEED 12-INCHES AND SHALL BE COMPACTED TO AT LEAST 95% OF ITS MAXIMUM DRY DENSITY AS DETERMINED BY ASTM D-1557.
4. PAVEMENT CLASSES REFER TO CONNECTICUT, DEPARTMENT OF TRANSPORTATION, STANDARD SPECIFICATION FOR ROADS, BRIDGES AND INCIDENTAL CONSTRUCTION, FORM 818.
5. CONTRACTOR SHALL COORDINATE WITH GEOTECHNICAL REPORT PROVIDED BY WHITESTONE ASSOCIATES, INC. FOR MORE INFORMATION.

2 ASPHALT PAVEMENT SECTION
N.T.S.

CONCRETE SECTION	SURFACE COURSE - 'X'	BASE - 'Y'	SUBBASE - 'Z'	REINFORCEMENT
HEAVY DUTY	7 INCHES	6 INCHES	6 INCHES	W5.4/W5.4 WWF

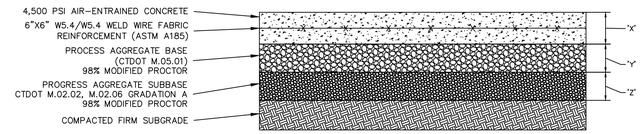

NOTES:
1. PRIOR TO ANY PAVING ACTIVITIES, THE SUBGRADE OR SUBBASE SHALL BE PROOF ROLLED.
2. PRIOR TO INSTALLATION OF PAVEMENT, THE SUBGRADE SHOULD BE SURFACE COMPACTED WITH A MINIMUM OF 6 PASSES WITH A VIBRATORY ROLLER HAVING A MINIMUM STATIC WEIGHT OF 5-TONS.
3. ALL AREAS TO BE PAVED SHALL BE PROOFROLLED WITH AT LEAST 4 PASSES OF EITHER A SMOOTH ROLLER HAVING A MINIMUM STATIC DRUM WEIGHT OF 5-TONS OR A FULLY LOADED TANDEM DUMP TRUCK.
4. ANY SOFT AREAS SHALL BE REMOVED AND REPLACED WITH CLEAN, GRANULAR, FREE-DRAINING SOIL.
5. FILL SHALL BE PLACED IN LOOSE LIFTS NOT TO EXCEED 12-INCHES AND SHALL BE COMPACTED TO AT LEAST 95% OF ITS MAXIMUM DRY DENSITY AS DETERMINED BY ASTM D-1557.
6. TRANSVERSE AND LONGITUDINAL CONTROL JOINTS SHALL BE SAW CUT AT 15 FT MAXIMUM SPACING.
7. DOWEL BARS SHALL BE PLACED AT ALL JOINTS.
8. PAVEMENT CLASSES REFER TO CONNECTICUT, DEPARTMENT OF TRANSPORTATION, STANDARD SPECIFICATION FOR ROADS, BRIDGES AND INCIDENTAL CONSTRUCTION, FORM 818.
9. PAVEMENT THICKNESS AT THE OUTER TWO FEET OF THE RIGID CONCRETE PAVEMENT SHOULD BE 12 INCHES.
9 CONTRACTOR SHALL COORDINATE WITH GEOTECHNICAL REPORT PROVIDED BY WHITESTONE ASSOCIATES, INC. FOR MORE INFORMATION.

3 CONCRETE PAVEMENT SECTION
N.T.S.

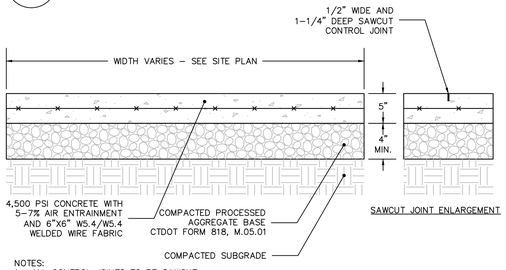

NOTES:
1. ALL CONTROL JOINTS TO BE SAWCUT.
2. SIDEWALKS TO COMPLY WITH TOWN STANDARDS WHERE APPLICABLE.
3. EXPANSION AND CONTROL JOINTS SHALL BE INSTALLED PER LAYOUT AND DIMENSIONING PLANS. IF NOT SPECIFICALLY DETAILED MAXIMUM SPACING OF JOINTS SHALL BE AS FOLLOWS:
   EXPANSION - 20 FT.
   CONTROL - 5 FT.
4. CONTROL JOINTS SHALL BE SPACED EQUAL TO THE WIDTH BUT SHALL NOT EXCEED 6 FT. CARE SHALL BE TAKEN TO ASSURE UNIFORM GRADE, FREE OF SAGS AND SHORT GRADE CHANGES.
5. SURFACE TEXTURE SHALL BE A LIGHT BROOMING, TRANSVERSE TO THE LENGTH OF THE WALK.
6. CONTRACTOR TO PROVIDE 10'x10' MOCKUP SHOWING EXPANSION JOINTS, SAWCUT JOINTS, AND BROOM FINISH PRIOR TO INSTALLATION.

4 CONCRETE SIDEWALK
N.T.S.

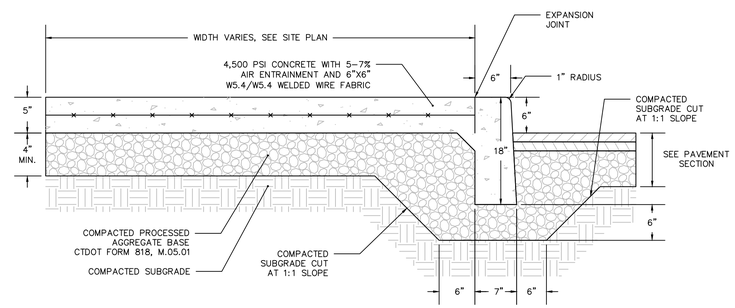

5 MONOLITHIC CONCRETE CURB/SIDEWALK
N.T.S.

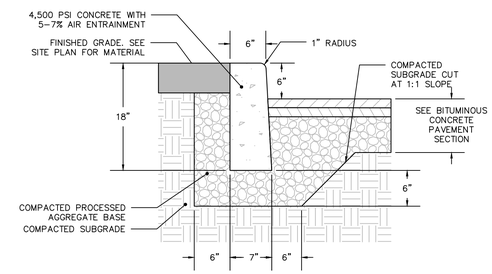

NOTES:
1. TRANSVERSE JOINTS 1/2" WIDE SHALL BE INSTALLED IN THE CAST-IN-PLACE CURB 20'-0" APART AND SHALL BE FILLED WITH PREFORMED BITUMINOUS JOINT FILLER.
2. FOR CAST-IN-PLACE CURB, EXPOSED CONCRETE SURFACE IS TO BE RUBBED TO PROVIDE SMOOTH FINISHED SURFACE.

6 CONCRETE CURB
N.T.S.

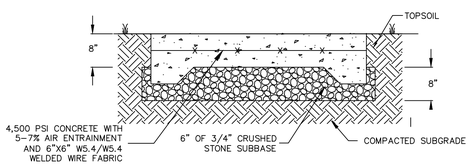

NOTES:
1. SURFACE TEXTURE SHALL BE A LIGHT BROOMING. CARE SHALL BE TAKEN TO ASSURE UNIFORM GRADE, FREE OF SAGS AND SHORT GRADE CHANGES.
2. SEE CS100 SERIES PLAN SHEETS FOR LOCATION AND DIMENSIONS

7 CONCRETE PAD
N.T.S.

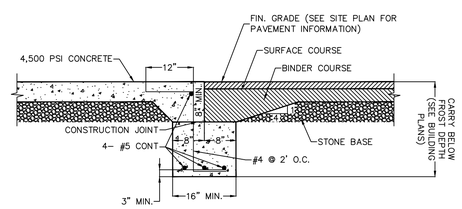

8 ASPHALT/CONCRETE JOINT DETAIL
N.T.S.

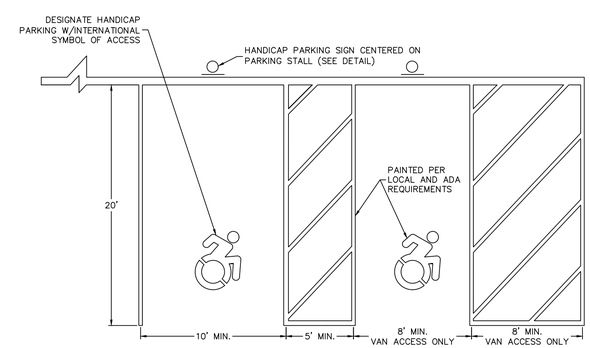

NOTES:
1. ALL PAINT SHALL BE EPOXY PAINT (2 COATS), MEETING THE REQUIREMENTS OF AASHTO M248 TYPE F, PAINT SHALL BE APPLIED AS SPECIFIED BY THE MANUFACTURER.
2. SYMBOLS & PARKING STALLS SHALL CONFORM TO THE REQUIREMENTS OF THE AMERICAN DISABILITIES ACT (ADA) AND THE MANUAL ON UNIFORM TRAFFIC CONTROL DEVICES, LATEST EDITION.

12 HANDICAP PARKING STALL STRIPING
N.T.S.

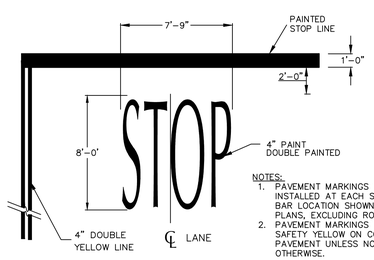

NOTES:
1. PAVEMENT MARKINGS TO BE INSTALLED AT EACH STOP BAR LOCATION SHOWN ON THE PLANS, EXCLUDING ROADWAYS.
2. PAVEMENT MARKINGS TO BE SAFETY YELLOW ON CONCRETE PAVEMENT UNLESS NOTED OTHERWISE.

9 STOP BAR
N.T.S.

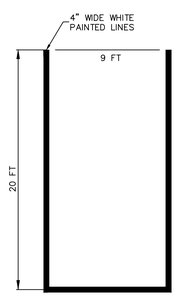

NOTES:
1. SEE SITE PLAN FOR PARKING LAYOUT.
2. EPOXY RESIN PAINT SHALL BE USED FOR PARKING STALL STRIPING.

10 PARKING STALL STRIPING
N.T.S.

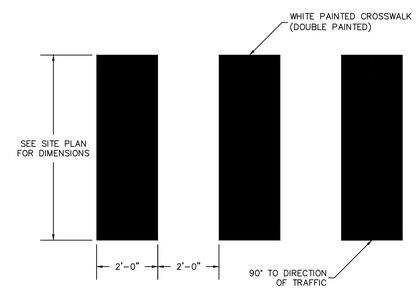

NOTES:
1. EPOXY RESIN PAVEMENT MARKING PAINT SHALL BE APPLIED TO ALL PROPOSED PAVEMENT MARKINGS.
2. CROSSWALK MUST BE 4' MIN FROM STOP BAR.

11 CROSSWALK
N.T.S.

FOR PERMITTING ONLY, NOT FOR CONSTRUCTION

Date	Description	No.

Revisions

STATE OF CONNECTICUT · TIMOTHY S. OSBORNE · No. 29302 · LICENSED PROFESSIONAL ENGINEER

LANGAN
Langan Engineering and Environmental Services, Inc.
555 Long Wharf Drive
New Haven, CT 06511
T: 203.562.5771 F: 203.789.6142 www.langan.com

Project
NORTH BLOOMFIELD COMMERCE CENTER
116 WEST DUDLEY TOWN ROAD
MAP 16, LOT 43
BLOOMFIELD CONNECTICUT

APPLICANT/DEVELOPER:
NORTHPOINT DEVELOPMENT
3315 NORTH OAK TRAFFICWAY
KANSAS CITY, MO 64116

SUBMISSION PURPOSE: INLAND WETLANDS AND WATERCOURSES COMMISSION PERMIT APPLICATION

Drawing Title
SITE DETAILS I

Project No. 140255601
Date 12/08/2022
Drawn By JMGM
Checked By TSO
Drawing No. CS501

LANGAN
Project No. 140255601

© 2022 Langan

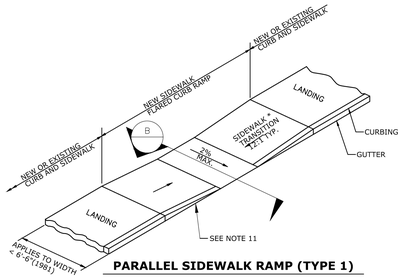

PARALLEL SIDEWALK RAMP (TYPE 1)

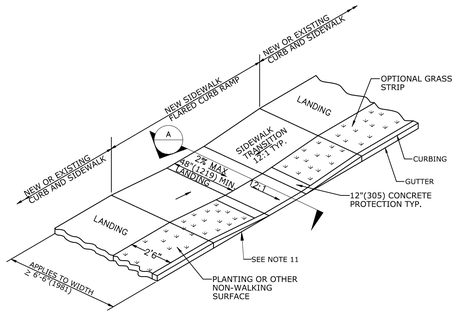

PERPENDICULAR SIDEWALK RAMP (TYPE 2)

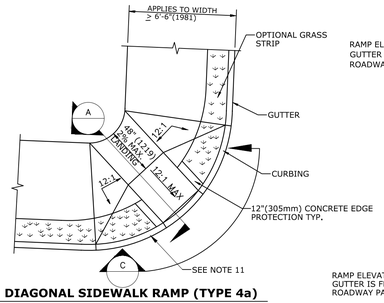

DIAGONAL SIDEWALK RAMP (TYPE 4a)

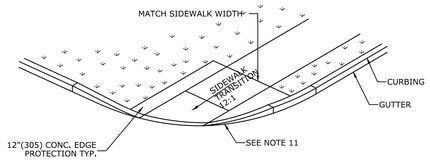

DIAGONAL SIDEWALK RAMP (TYPE 4c)

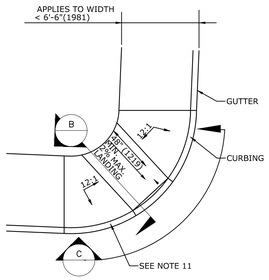

DIAGONAL/PARALLEL SIDEWALK RAMP (TYPE 4b)

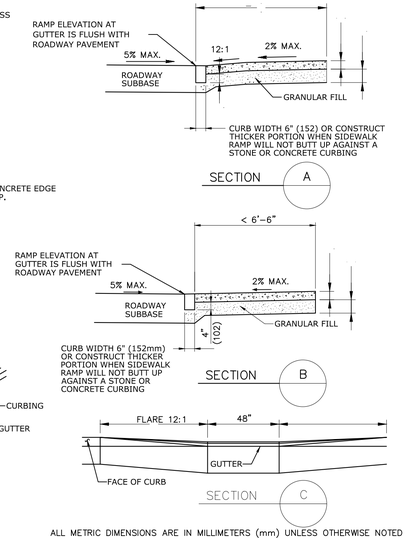

ALL METRIC DIMENSIONS ARE IN MILLIMETERS (mm) UNLESS OTHERWISE NOTED

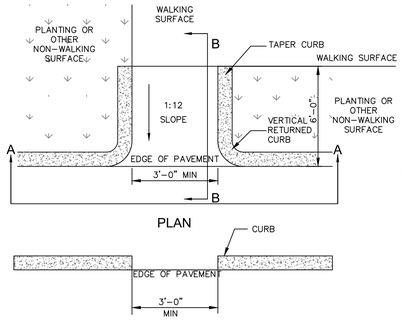

CURB RETURN TYPE

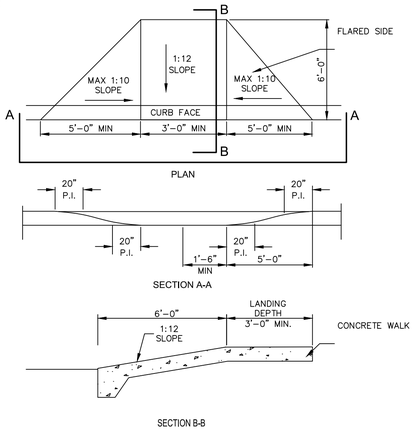

FLARED TYPE

GENERAL NOTES:

1. MAXIMUM SLOPES OF ADJOINING GUTTERS AND ROAD SURFACES IMMEDIATELY ADJACENT TO THE SIDEWALK RAMP OR ACCESSIBLE ROUTE SHOULD NOT EXCEED 20:1.
2. CARE SHALL BE TAKEN TO ASSURE UNIFORM GRADE ON THE RAMP, FREE OF SAGS AND ABRUPT GRADE CHANGES.
3. ALL RAMPS SHALL BE CONSTRUCTED OF CLASS "C" CONCRETE IN ACCORDANCE WITH CONNECTICUT STANDARD SPECIFICATIONS ARTICLE M.03.01.
4. SIDEWALK RAMPS SHALL HAVE A COARSE BROOM FINISH TRANSVERSE TO THE SLOPE OF THE RAMP.
5. DIAGONAL SIDEWALK RAMPS AT MARKED CROSSINGS SHALL BE WHOLLY CONTAINED WITHIN THE MARKINGS, EXCLUDING ANY FLARED SIDES.
6. REMOVAL OF EXISTING SIDEWALK FOR NEW RAMP INSTALLATIONS SHALL BE TO THE NEAREST EXPANSION / CONTRACTION JOINT OR DUMMY JOINT. 12:1 MAY NOT BE ACHIEVABLE DUE TO SIDEWALK GRADE. IN RECOGNITION OF THIS, A MINIMUM LIMIT OF 15' (4.57m) FOR A PARALLEL RAMP SHALL BE USED. REMOVAL SHALL NOT BE FURTHER THAN 2' (610) FROM THE PROPOSED RAMP UNLESS DIRECTED BY THE ENGINEER. SAW CUT REQUIRED FOR DUMMY JOINTS SHALL BE INCLUDED IN THE COST OF "CONCRETE SIDEWALK".
7. EXPANSION JOINTS IN CONCRETE SHALL MATCH THOSE IN ADJACENT SIDEWALKS BUT IN NO CASE SHALL THE SPACING BETWEEN EXPANSION JOINTS EXCEED 12' (3.66m) UNLESS OTHERWISE NOTED.
8. RAISED MEDIAN ISLANDS IN MARKED CROSSINGS SHALL HAVE SIDEWALK RAMPS AT BOTH SIDES AND A LEVEL AREA AT LEAST 4' (1219) LONG BETWEEN THE RAMPS. IF THIS CAN NOT BE ACHIEVED, THE RAISED ISLAND SHALL BE CUT THROUGH LEVEL WITH THE ROADWAY AS SHOWN ON THE PLANS OR AS DIRECTED BY THE ENGINEER.
9. SIDEWALK RAMPS, WHEN CONSTRUCTED IN CONJUNCTION WITH SIDEWALK, SHALL BE PAID FOR UNDER THE ITEM "CONCRETE SIDEWALK", INCLUDING CURBING WITHIN THE LIMITS OF THE NEW SIDEWALK RAMP AND DETECTABLE WARNING STRIPS.WHEN JUST A SIDEWALK RAMP IS CONSTRUCTED, IT SHALL BE PAID FOR UNDER THE ITEM "SIDEWALK RAMP" INCLUDING CURBING WITHIN THE LIMITS OF THE NEW SIDEWALK AND DETECTABLE WARNING STRIP.
10. CURBING WITHIN THE LIMITS OF THE NEW SIDEWALK RAMP SHALL BE CONSTRUCTED IN CONFORMANCE WITH THE REQUIREMENTS OF FORM 818.
11. TRANSITION TO FULL HEIGHT CURB. INSTALL STONE CURBING IF ADJACENT CURBING IS STONE. INSTALL CONCRETE CURBING IF ADJACENT CURBING IS CONCRETE OR BITUMINOUS.
12. INSTALL THE EDGE OF THE DETECTABLE WARNING STRIP 6" (152) FROM THE EDGE OF ROAD.
13. TO PERMIT WHEELCHAIR WHEELS TO ROLL BETWEEN DOMES, ALIGN DOMES ON A SQUARE GRID IN THE DIRECTION OF PEDESTRIAN TRAVEL.

ADA NOTES:

1. CONTRACTOR SHALL REFER TO LATEST ADA ACCESSIBILITY GUIDELINES TO ENSURE THAT DETAILS ARE CURRENT AT THE TIME OF CONSTRUCTION, AND SHALL NOTIFY ENGINEER PRIOR TO START OF CONSTRUCTION IF DISCREPANCIES ARE FOUND.
2. CONTRACTOR SHALL VERIFY IF ADDITIONAL REQUIREMENTS OR ACCESSIBILITY REGULATIONS ARE USED BY THE LOCAL MUNICIPALITY BUILDING DEPARTMENT OR CONSTRUCTION DEPARTMENT. IF THOSE REGULATIONS DIFFER FROM ADA, CONTRACTOR SHALL NOTIFY DESIGN ENGINEER PRIOR TO CONSTRUCTION.
3. IF A CURB RAMP IS LOCATED WHERE PEDESTRIANS MUST WALK ACROSS THE RAMP, OR WHERE IT IS NOT PROTECTED BY HANDRAILS OR GUARDRAILS, IT SHALL HAVE FLARED SIDES.
4. LANDINGS ARE REQUIRED AT THE TOP OF THE CURB RAMP WITH MINIMUM 3 FOOT CLEAR LENGTH. IN ALTERATIONS, WHERE THERE IS NO LANDING AT THE TOP OF CURB RAMPS, THE FLARES SHALL BE PROVIDED AND NOT BE STEEPER THAN 1:12. THE WIDTH OF THE FLARED SIDE SHALL BE EXTENDED AS NECESSARY TO REACH THE DESIRED CURB REVEAL HEIGHT.
5. ALL RAMPS TO HAVE A SLIP RESISTANT SURFACE AND BROOM FINISH IN ACCORDANCE WITH ADA REQUIREMENTS.
6. IF DETECTABLE WARNINGS ARE PROPOSED, SEE ADA DETECTABLE WARNING SURFACE DETAIL FOR MORE INFORMATION.
7. TRANSITIONS FROM RAMPS TO WALKS, GUTTERS, OR STREETS SHALL BE FLUSH AND FREE OF ABRUPT CHANGES. MAXIMUM SLOPES OF ADJOINING GUTTERS, ROAD SURFACE IMMEDIATELY ADJACENT TO THE CURB RAMP, OR ACCESSIBLE ROUTE SHALL NOT EXCEED 1:20.
8. CURB RAMPS AND FLARES SHALL BE LOCATED SO THAT THEY DO NOT PROJECT INTO VEHICULAR TRAFFIC LANES, PARKING SPACES, OR PARKING ACCESS AISLES. CURB RAMPS AT MARKED CROSSINGS SHALL BE WHOLLY CONTAINED WITHIN THE MARKINGS, EXCLUDING FLARES.

1 **ON-SITE SIDEWALK RAMPS**

N.T.S.

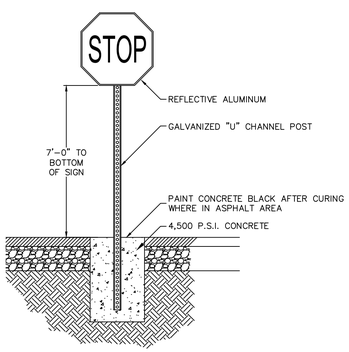

NOTES:

1. ALL POSTS SHALL BE OF ADEQUATE LENGTH TO MEET THE REQUIREMENTS FOR ERECTION AS STATED IN THE CURRENT "MANUAL ON UNIFORM TRAFFIC CONTROL DEVICES FOR STREETS AND HIGHWAYS".
2. ALL POSTS SHALL BE EMBEDDED 4'-6" MINIMUM BELOW GRADE.
3. ALL STEEL POSTS AND BRACKETS SHALL BE CUT, BENT, AND HOLES PUNCHED AND DRILLED BEFORE GALVANIZING. GALVANIZING SHALL BE IN CONFORMANCE WITH CURRENT A.S.T.M. SPECIFICATION A123-78 (OR LATEST REVISED).
4. POSTS SHALL BE BREAKAWAY TYPE II TWO-PIECE U-POST OR OTHER BREAKAWAY STRUCTURAL SUPPORT HARDWARE AS NOTED IN THE LATEST EDITION OF AASHTO'S "SPECIFICATIONS FOR STRUCTURAL SUPPORTS FOR HIGHWAY SIGNS, LUMINARIES, AND TRAFFIC SIGNALS."
5. SIGN PANEL SIZES SHALL DETERMINE POST TYPE AND NUMBERS AS SHOWN ON THIS DETAIL AND DIRECTIONAL SIGN SHEET.
6. BOLTS SHALL NOT PROTRUDE MORE THAN 3/4" BEYOND THE NUT WHEN TIGHT BUT SHALL ENGAGE ALL THREADS IN THE NUT.
7. ALL TRAFFIC AND PEDESTRIAN SIGNAGE AND LOCATION SHALL BE IN ACCORDANCE WITH THE MANUAL ON UNIFORM TRAFFIC CONTROL DEVICES AND ALL CURRENT AMENDMENTS.

2 **SIGN DETAIL**

N.T.S.

NOTES:

1. ALL POSTS SHALL BE OF ADEQUATE LENGTH TO MEET THE REQUIREMENTS FOR ERECTION AS STATED IN THE CURRENT "MANUAL ON UNIFORM TRAFFIC CONTROL DEVICES FOR STREETS AND HIGHWAYS".
2. ALL POSTS SHALL BE EMBEDDED 4'-6" MINIMUM BELOW GRADE.
3. ALL STEEL POSTS AND BRACKETS SHALL BE CUT, BENT, AND HOLES PUNCHED AND DRILLED BEFORE GALVANIZING. GALVANIZING SHALL BE IN CONFORMANCE WITH CURRENT A.S.T.M. SPECIFICATION A123-78 (OR LATEST REVISED).
4. POSTS SHALL BE BREAKAWAY TYPE II TWO-PIECE U-POST OR OTHER BREAKAWAY STRUCTURAL SUPPORT HARDWARE AS NOTED IN THE LATEST EDITION OF AASHTO'S "SPECIFICATIONS FOR STRUCTURAL SUPPORTS FOR HIGHWAY SIGNS, LUMINARIES, AND TRAFFIC SIGNALS."
5. SIGN PANEL SIZES SHALL DETERMINE POST TYPE AND NUMBERS AS SHOWN ON THIS DETAIL AND DIRECTIONAL SIGN SHEET.
6. BOLTS SHALL NOT PROTRUDE MORE THAN 3/4" BEYOND THE NUT WHEN TIGHT BUT SHALL ENGAGE ALL THREADS IN THE NUT.
7. HANDICAP PARKING SIGN SHALL CONFORM WITH CURRENT STATE & LOCAL CODES AND REGULATIONS.

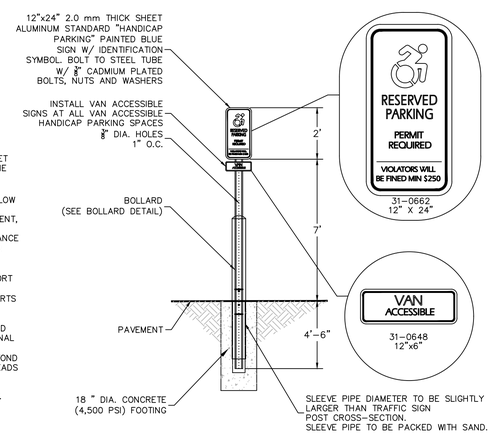

3 **ADA SIGN BOLLARD**

N.T.S.

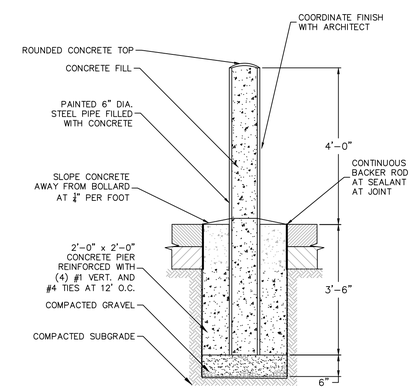

NOTES:
1. COLOR TO BE SAFETY YELLOW WITH REFLECTIVE STRIPES,

4 **BOLLARD**

N.T.S.

FOR PERMITTING ONLY, NOT FOR CONSTRUCTION

Date	Description	No.

Revisions

LANGAN
Langan Engineering and Environmental Services, Inc.
555 Long Wharf Drive
New Haven, CT 06511
T: 203.562.5771 F: 203.789.6142 www.langan.com

Project
NORTH BLOOMFIELD COMMERCE CENTER
116 WEST DUDLEY TOWN ROAD
MAP 16, LOT 43
BLOOMFIELD CONNECTICUT

APPLICANT/DEVELOPER:
NORTHPOINT DEVELOPMENT
3315 NORTH OAK TRAFFICWAY
KANSAS CITY, MO 64116

SUBMISSION PURPOSE: INLAND WETLANDS AND WATERCOURSES COMMISSION PERMIT APPLICATION

Drawing Title
SITE DETAILS II

Project No. 140255601
Date 12/08/2022
Drawn By JMGM
Checked By TSO
Drawing No. CS502

© 2022 Langan

Project No. 140255601

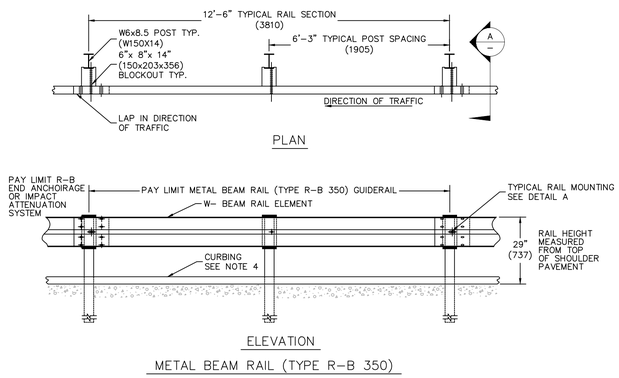

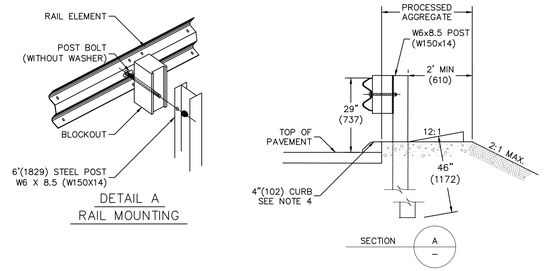

1

METAL BEAM GUIDE RAIL

N.T.S.

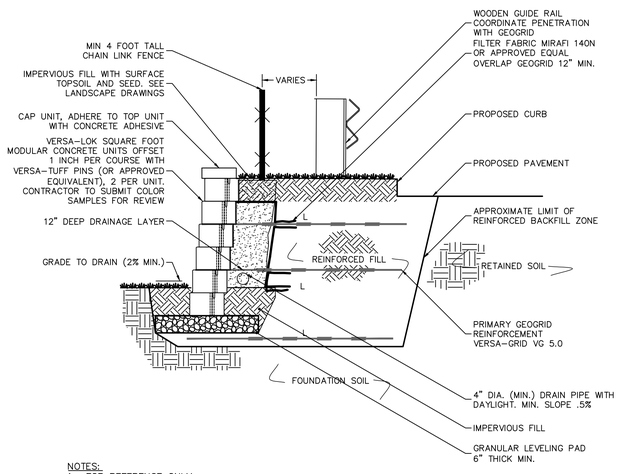

NOTES:
1. FOR REFERENCE ONLY
2. RETAINING WALL TO BE DESIGNED, SIGNED, & SEALED BY CT P.E. AT VERSA-LOK OR APPROVED EQUAL AND SUBMITTED AS CONTRACTOR SUBMITTAL FOR REVIEW BY CIVIL ENGINEER.

2

TYPICAL RETAINING WALL SECTION - FOR REFERENCE ONLY

N.T.S.

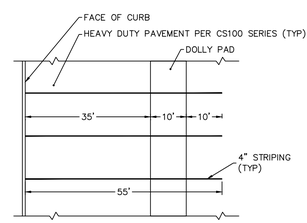

PLAN VIEW

NOTES:
1. DOLLY PADS SHALL BE HEAVY DUTY CONCRETE PAVEMENT (SEE DETAIL)
2. SURFACE TEXTURE SHALL BE A LIGHT BROOMING. CARE SHALL BE TAKEN TO ASSURE UNIFORM GRADE, FREE OF SAGS AND SHORT GRADE CHANGES.
3. SEE CS100 SERIES PLAN SHEETS FOR LOCATION AND DIMENSION.

3

DOLLY PADS

N.T.S.

FOR PERMITTING ONLY, NOT FOR CONSTRUCTION

Date	Description	No.

Revisions

LANGAN
Langan Engineering and Environmental Services, Inc.
555 Long Wharf Drive
New Haven, CT 06511
T: 203.562.5771 F: 203.789.6142 www.langan.com

Project
NORTH BLOOMFIELD COMMERCE CENTER
116 WEST DUDLEY TOWN ROAD
MAP 16, LOT 43
BLOOMFIELD CONNECTICUT

APPLICANT/DEVELOPER:
NORTHPOINT DEVELOPMENT
3315 NORTH OAK TRAFFICWAY
KANSAS CITY, MO 64116

SUBMISSION PURPOSE: INLAND WETLANDS AND WATERCOURSES COMMISSION PERMIT APPLICATION

Drawing Title
SITE DETAILS III

Project No. 140255601
Date 12/08/2022
Drawn By CMD
Checked By TSO
Drawing No. CS503

LANGAN
Project No. 140255601

© 2022 Langan

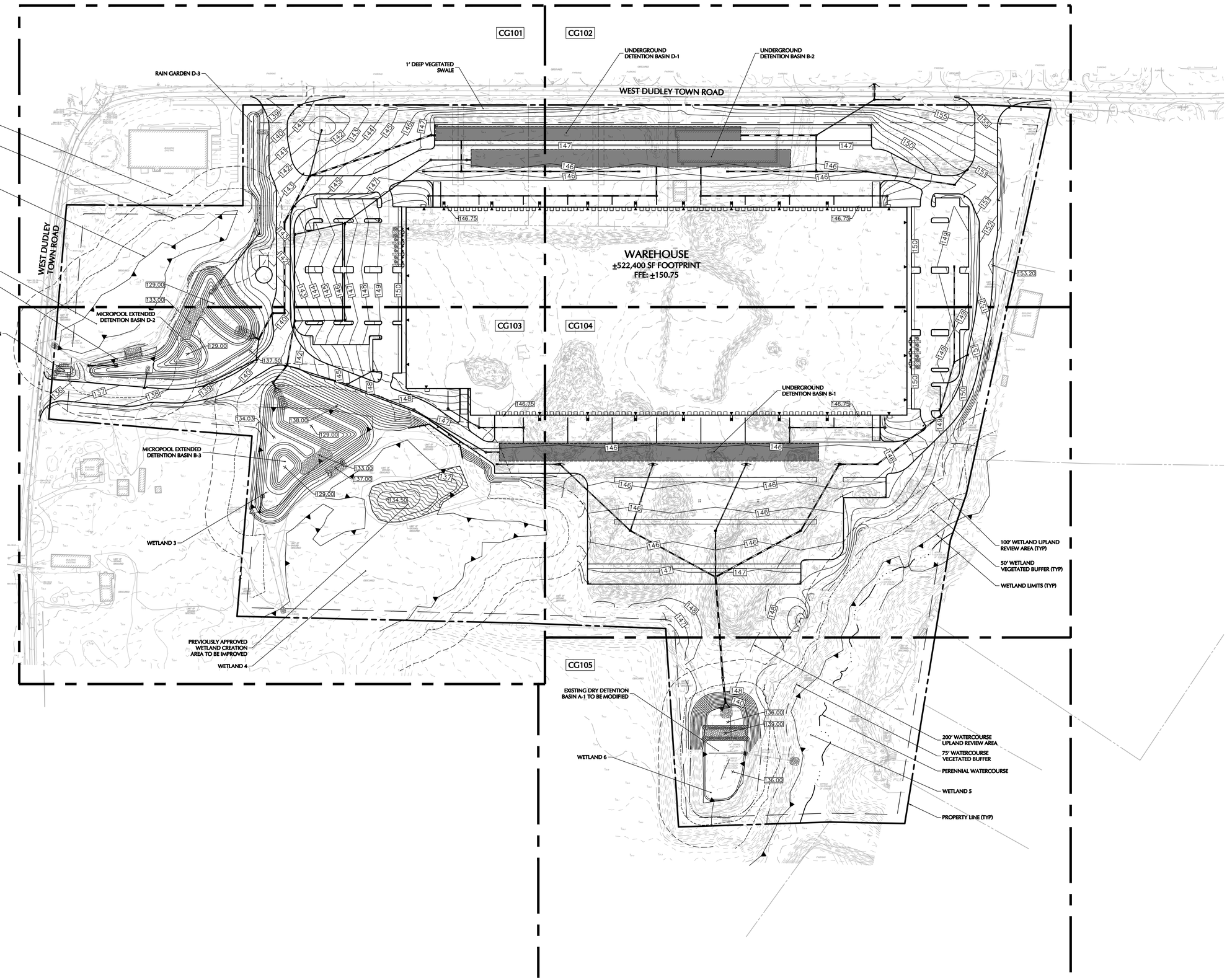

FOR PERMITTING ONLY, NOT FOR CONSTRUCTION

100 0 50 100
SCALE IN FEET

Date	Description	No.
Revisions		

STATE OF CONNECTICUT
DUNCAN T. S. GREEN
No. 23,800
LICENSED
PROFESSIONAL ENGINEER

LANGAN
Langan Engineering and Environmental Services, Inc.
555 Long Wharf Drive
New Haven, CT 06511
T: 203.562.5771 F: 203.789.6142 www.langan.com

Project
NORTH BLOOMFIELD COMMERCE CENTER
116 WEST DUDLEY TOWN ROAD
MAP 16, LOT 43
BLOOMFIELD CONNECTICUT

APPLICANT/DEVELOPER:
NORTHPOINT DEVELOPMENT
3315 NORTH OAK TRAFFICWAY
KANSAS CITY, MO 64116

SUBMISSION PURPOSE: INLAND WETLANDS AND WATERCOURSES COMMISSION PERMIT APPLICATION

Drawing Title
OVERALL GRADING & DRAINAGE PLAN

Project No. 140255601
Date 12/08/2022
Drawn By ALF
Checked By DTG
Drawing No. CG100

Project No. 140255601

© 2022 Langan

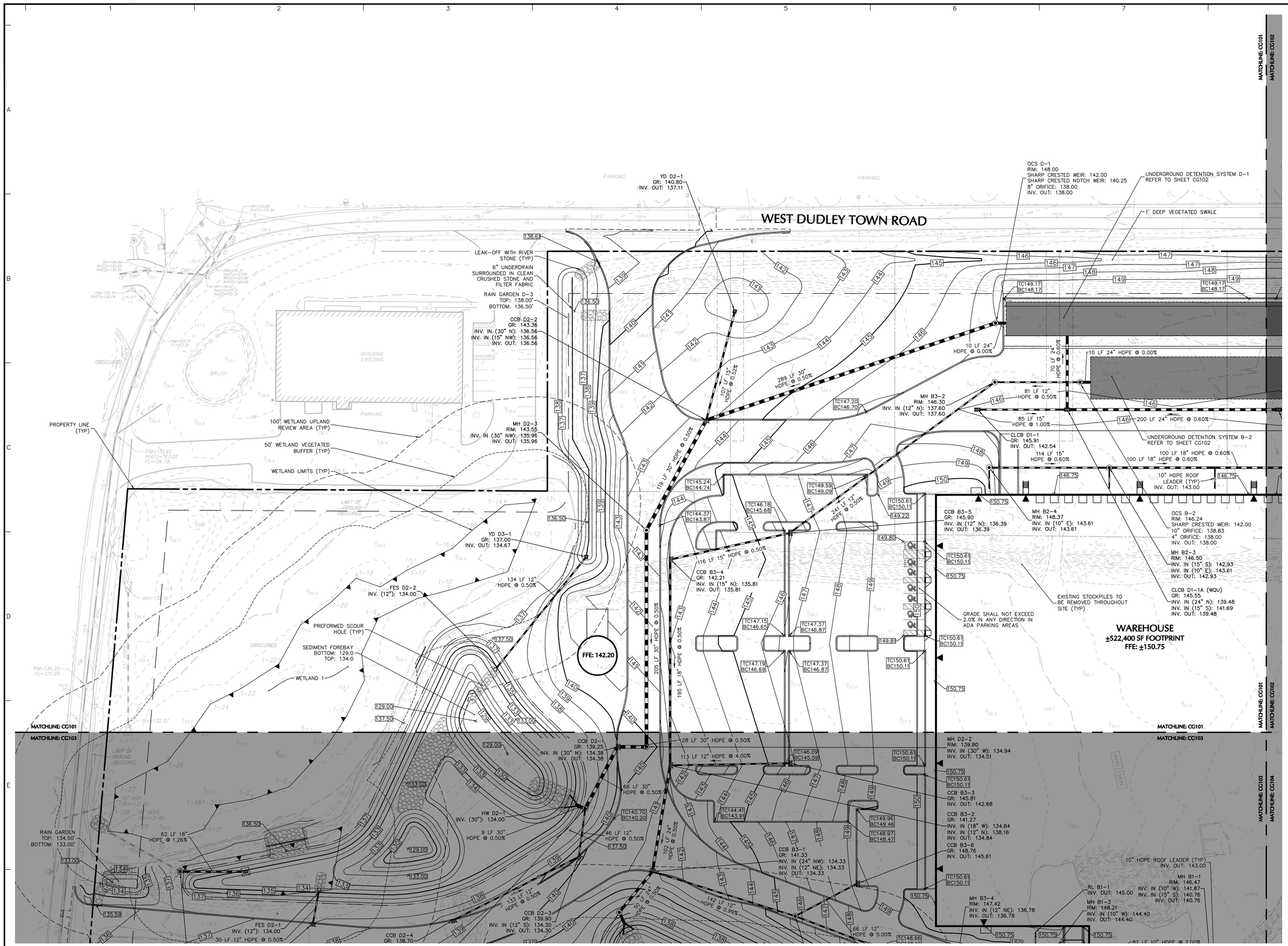

Date	Description	No.

Revisions

STATE OF CONNECTICUT
DOUGLAS T. GOLDSMITH
No. 28,290
LICENSED
PROFESSIONAL ENGINEER

LANGAN

Langan Engineering and Environmental Services, Inc.

555 Long Wharf Drive
New Haven, CT 06511

T: 203.562.5771 F: 203.789.6142 www.langan.com

Project

NORTH BLOOMFIELD COMMERCE CENTER

116 WEST DUDLEY TOWN ROAD
MAP 16, LOT 43

BLOOMFIELD CONNECTICUT

APPLICANT/DEVELOPER:
NORTHPOINT DEVELOPMENT
3315 NORTH OAK TRAFFICWAY
KANSAS CITY, MO 64116

SUBMISSION PURPOSE: INLAND WETLANDS AND WATERCOURSES COMMISSION PERMIT APPLICATION

Drawing Title

GRADING & DRAINAGE PLAN I

Project No. 140255601

Date 12/08/2022

Drawn By ALF

Checked By DTG

Drawing No. CG101

LANGAN

Project No. 140255601

© 2022 Langan

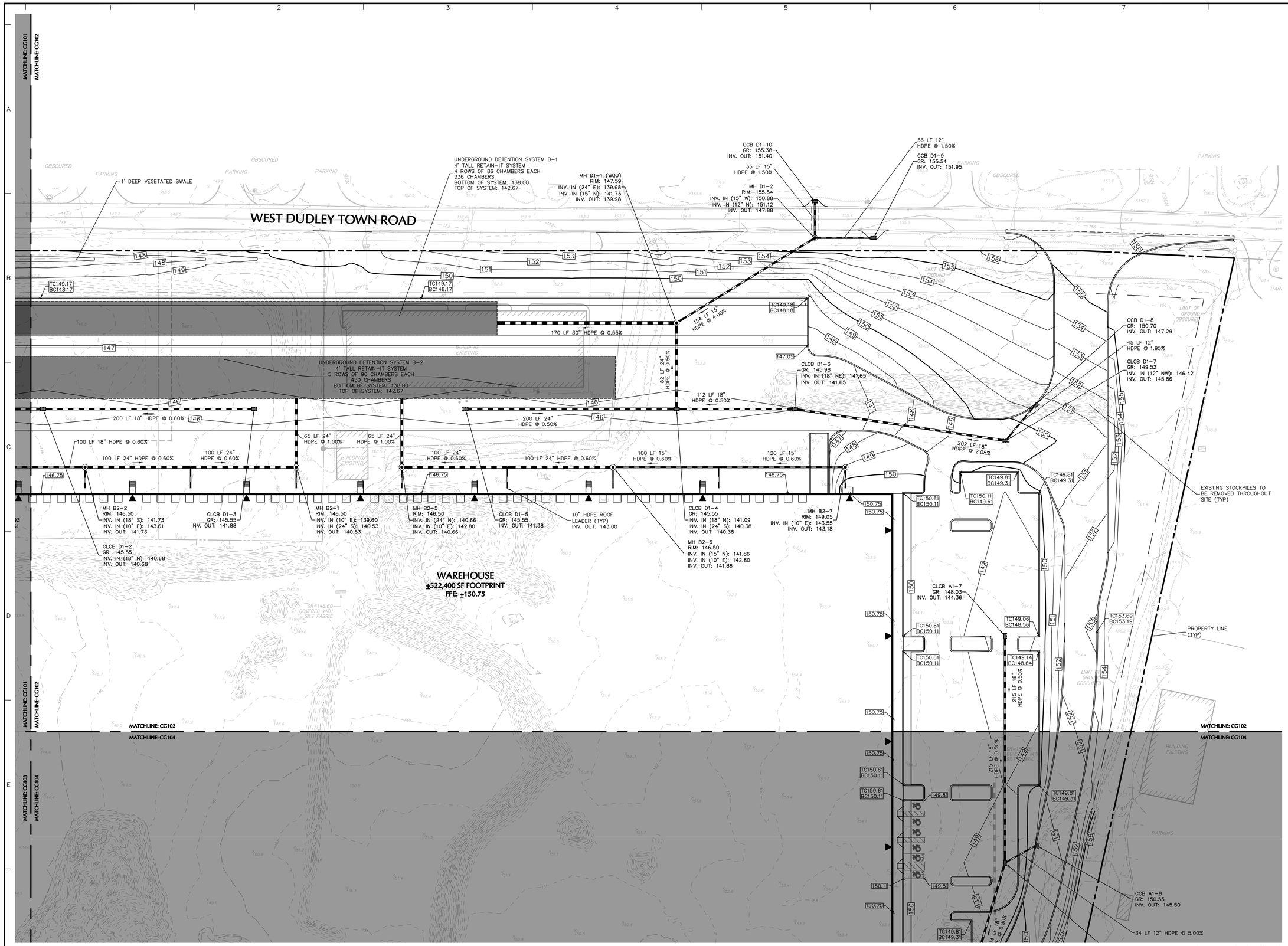

CT NAD 83

SHEET LEGEND

1" = 1,000'

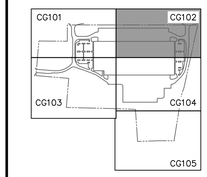

Date	Description	No.
Revisions		

STATE OF CONNECTICUT
ROBERT S. ORSI
No. 23,800
LICENSED
PROFESSIONAL ENGINEER

LANGAN

Langan Engineering and Environmental Services, Inc.

555 Long Wharf Drive
New Haven, CT 06511

T: 203.562.5771 F: 203.789.6142 www.langan.com

Project

NORTH BLOOMFIELD COMMERCE CENTER

116 WEST DUDLEY TOWN ROAD
MAP 16, LOT 43

BLOOMFIELD CONNECTICUT

APPLICANT/DEVELOPER:
NORTHPOINT DEVELOPMENT
3315 NORTH OAK TRAFFICWAY
KANSAS CITY, MO 64116

SUBMISSION PURPOSE: INLAND WETLANDS AND WATERCOURSES COMMISSION PERMIT APPLICATION

Drawing Title

GRADING & DRAINAGE PLAN II

Project No.	Drawing No.
140255601	CG102
Date: 12/08/2022	
Drawn By: ALF	
Checked By: DTG	

Project No. 140255601

LANGAN

FOR PERMITTING ONLY, NOT FOR CONSTRUCTION

© 2022 Langan

Date: 12/7/2022 Time: 19:53 User: afedus Style Table: Langan.stb Layout: CG102 Document Code: 140255601-0501-CG101-0103

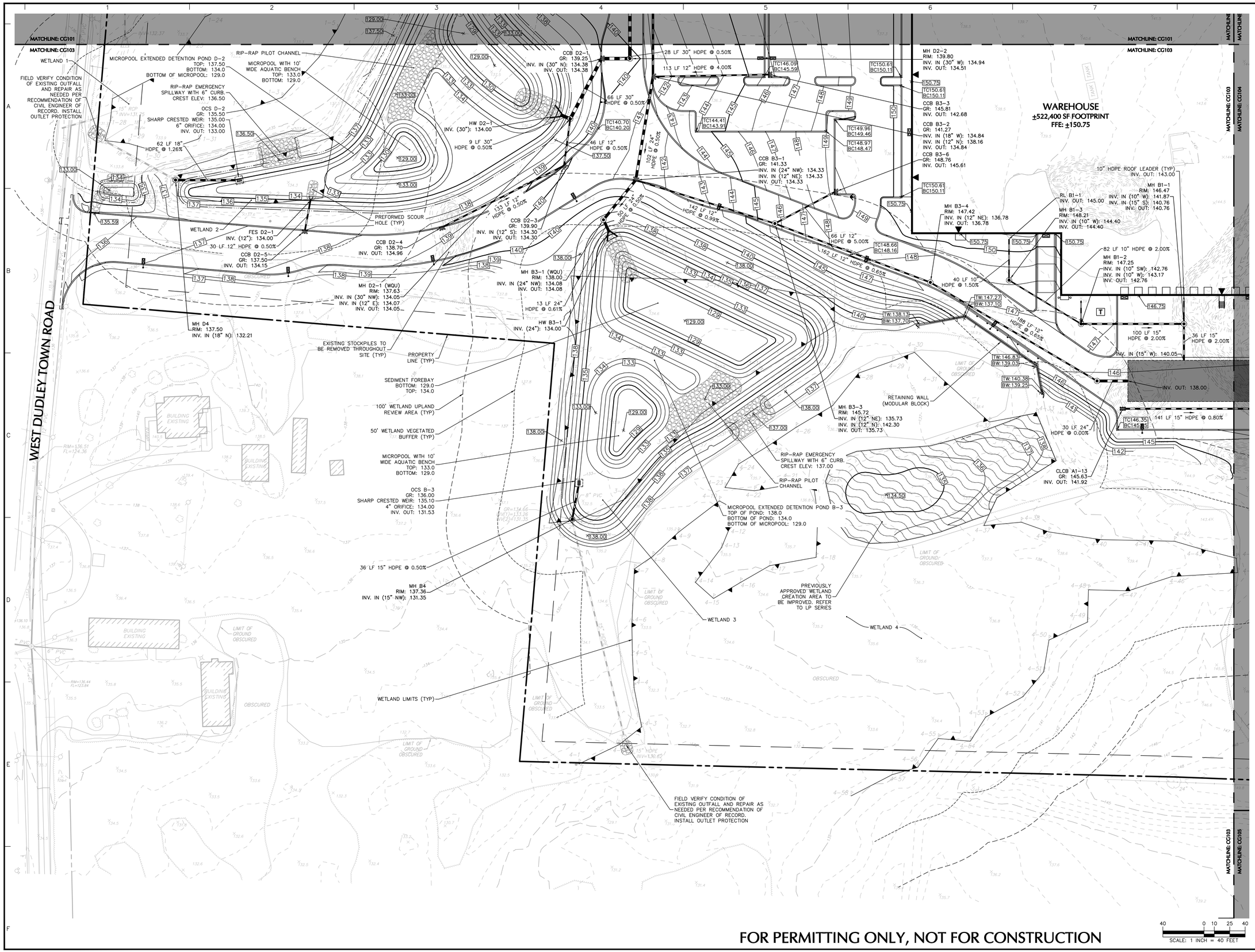

SHEET LEGEND

1" = 1,000'

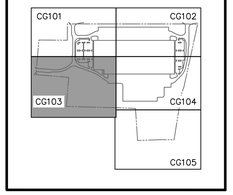

Date	Description	No.

Revisions

STATE OF CONNECTICUT
ANDREW T. S. DEGEN
No. 23,800
LICENSED
PROFESSIONAL ENGINEER

LANGAN

Langan Engineering and Environmental Services, Inc.

555 Long Wharf Drive
New Haven, CT 06511

T: 203.562.5771 F: 203.789.6142 www.langan.com

Project

NORTH BLOOMFIELD COMMERCE CENTER

116 WEST DUDLEY TOWN ROAD
MAP 16, LOT 43

BLOOMFIELD CONNECTICUT

APPLICANT/DEVELOPER:
NORTHPOINT DEVELOPMENT
3315 NORTH OAK TRAFFICWAY
KANSAS CITY, MO 64116

SUBMISSION PURPOSE: INLAND WETLANDS AND WATERCOURSES COMMISSION PERMIT APPLICATION

Drawing Title

GRADING & DRAINAGE PLAN III

Project No. 140255601

Date 12/08/2022

Drawn By ALF

Checked By DTG

Drawing No. CG103

FOR PERMITTING ONLY, NOT FOR CONSTRUCTION

40 0 10 25 40
SCALE: 1 INCH = 40 FEET

LANGAN

Project No. 140255601

© 2022 Langan

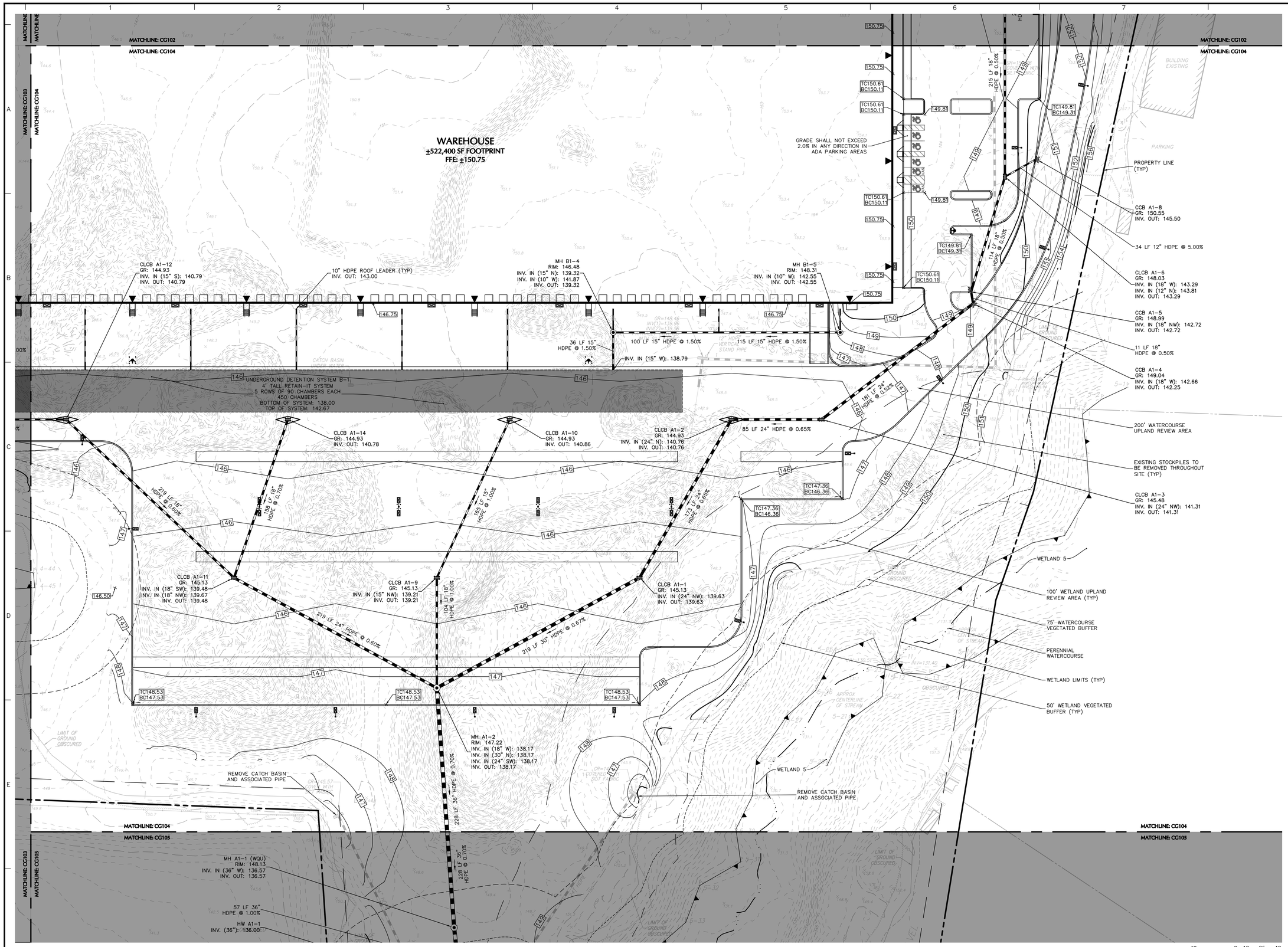

SHEET LEGEND

1" = 1,000'

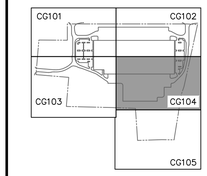

Date	Description	No.

Revisions

STATE OF CONNECTICUT
DAVID T. G. GRIFFIN
No. 23,800
LICENSED PROFESSIONAL ENGINEER

LANGAN

Langan Engineering and Environmental Services, Inc.

555 Long Wharf Drive
New Haven, CT 06511

T: 203.562.5771 F: 203.789.6142 www.langan.com

Project

NORTH BLOOMFIELD COMMERCE CENTER

116 WEST DUDLEY TOWN ROAD
MAP 16, LOT 43

BLOOMFIELD CONNECTICUT

APPLICANT/DEVELOPER:
NORTHPOINT DEVELOPMENT
3315 NORTH OAK TRAFFICWAY
KANSAS CITY, MO 64116

SUBMISSION PURPOSE: INLAND WETLANDS AND WATERCOURSES COMMISSION PERMIT APPLICATION

Drawing Title

GRADING & DRAINAGE PLAN IV

Project No. 140255601

Date 12/08/2022

Drawn By ALF

Checked By DTG

Drawing No. CG104

FOR PERMITTING ONLY, NOT FOR CONSTRUCTION

LANGAN

Project No. 140255601

© 2022 Langan

Date: 12/7/2022 Time: 19:54 User: afedus Style Table: Langan.stb Layout: CG104 Document Code: 140255601-0501-CG101-0105

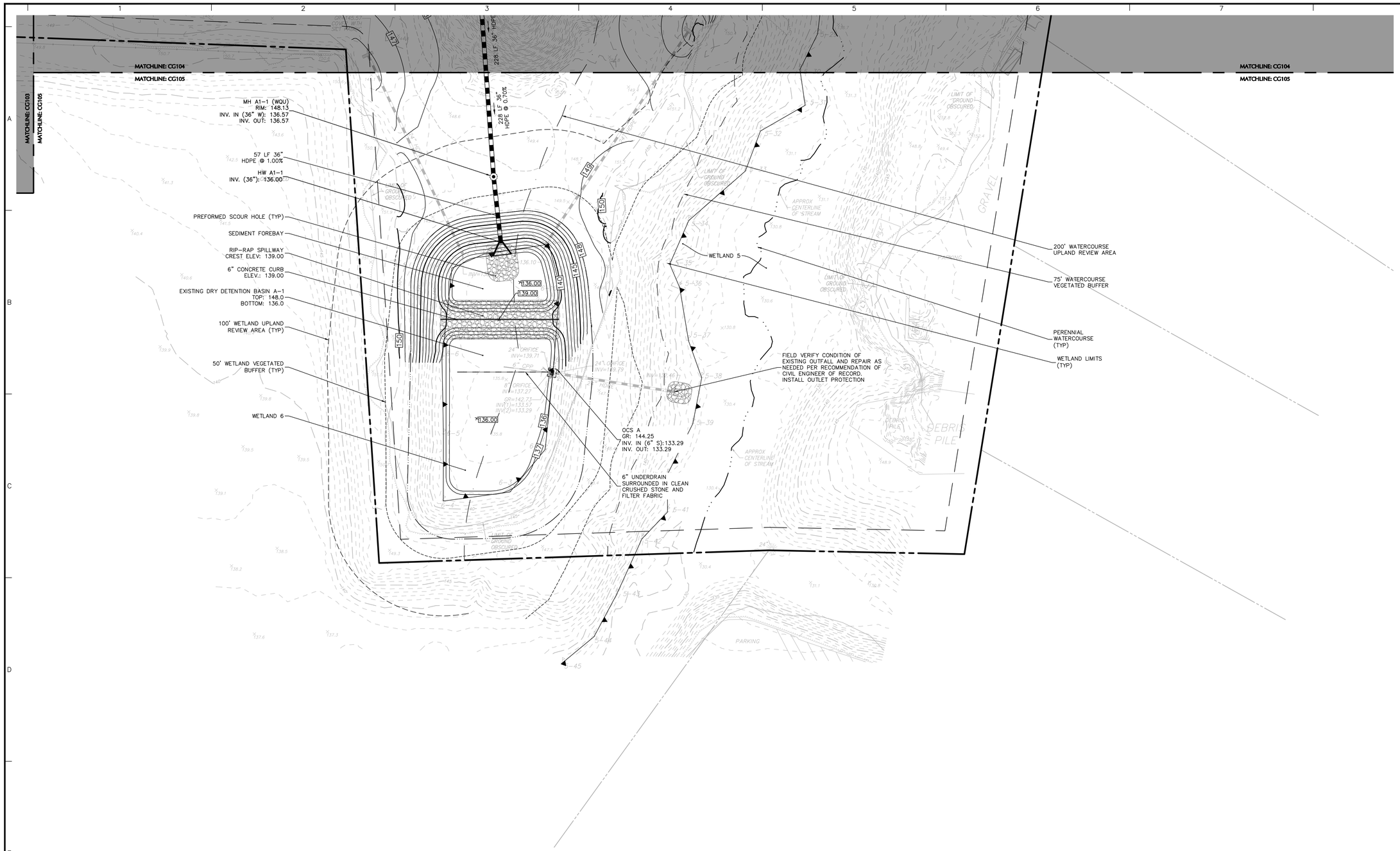

CT NAD 83

SHEET LEGEND

1" = 1,000'

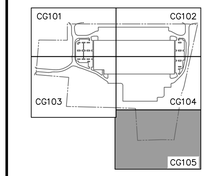

Date	Description	No.

Revisions

STATE OF CONNECTICUT
DOUGLAS T. GRAHAM
No. 25,[illegible]
LICENSED
PROFESSIONAL ENGINEER

LANGAN

Langan Engineering and
Environmental Services, Inc.

555 Long Wharf Drive
New Haven, CT 06511

T: 203.562.5771 F: 203.789.6142 www.langan.com

Project

NORTH BLOOMFIELD COMMERCE CENTER

116 WEST DUDLEY TOWN ROAD
MAP 16, LOT 43

BLOOMFIELD CONNECTICUT

APPLICANT/DEVELOPER:
NORTHPOINT DEVELOPMENT
3315 NORTH OAK TRAFFICWAY
KANSAS CITY, MO 64116

SUBMISSION PURPOSE: INLAND WETLANDS AND WATERCOURSES COMMISSION PERMIT APPLICATION

Drawing Title

GRADING & DRAINAGE PLAN V

Project No.	Drawing No.
140255601	CG105
Date: 12/08/2022	
Drawn By: ALF	
Checked By: DTG	

FOR PERMITTING ONLY, NOT FOR CONSTRUCTION

40 0 10 25 40
SCALE: 1 INCH = 40 FEET

LANGAN

Project No. 140255601

© 2022 Langan

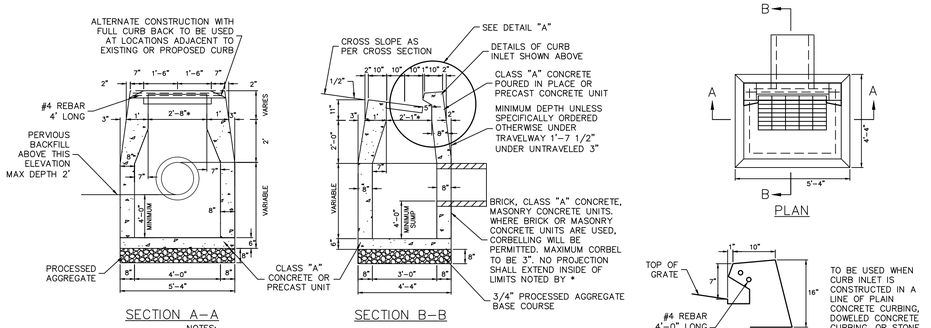

NOTES:
1. WHEN CATCH BASIN IS SET IN CONCRETE PAVEMENT THE 1/2" SLOPE ON THE TOP SURFACE SHALL BE CHANGED TO MATCH ADJOINING PAVEMENT.
2. IN SANDY SOILS, APPLY DAMP–PROOFING ON ALL 4 WALLS.

1 TYPE "C" SINGLE CATCH BASIN
N.T.S.

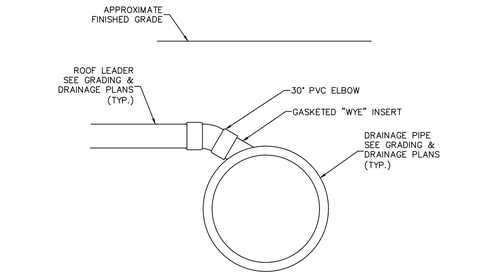

2 ROOF LEADER CONNECTION
N.T.S.

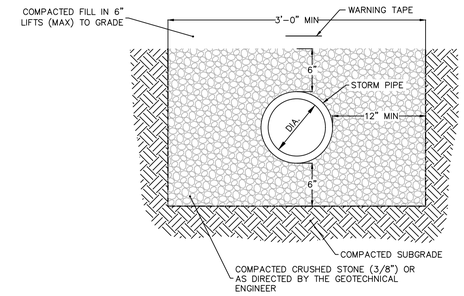

NOTE:
1. BACKFILL & BEDDING MATERIAL TO MEET MANUFACTURER'S SPECIFICATIONS AND DETAILS.

3 STORM PIPE BEDDING
N.T.S.

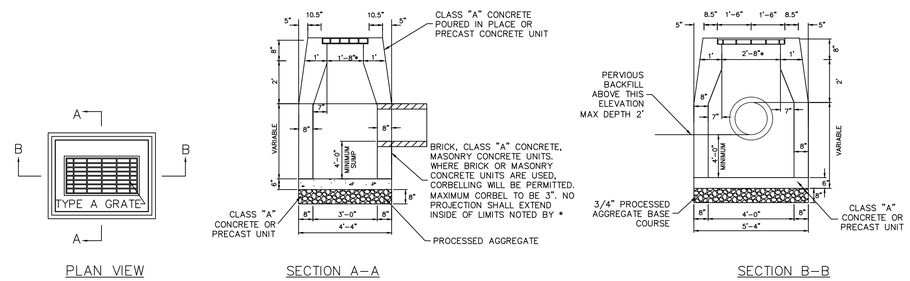

4 TYPE "CL" SINGLE CATCH BASIN
N.T.S.

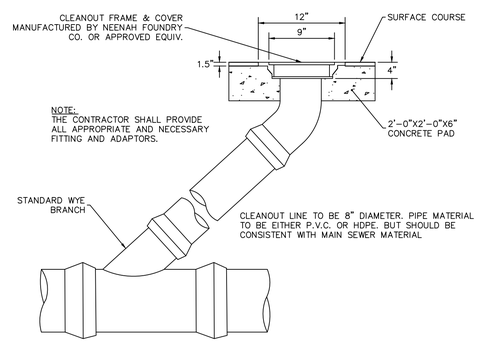

NOTE:
THE CONTRACTOR SHALL PROVIDE ALL APPROPRIATE AND NECESSARY FITTING AND ADAPTORS.

5 CLEANOUT (C.O.)
N.T.S.

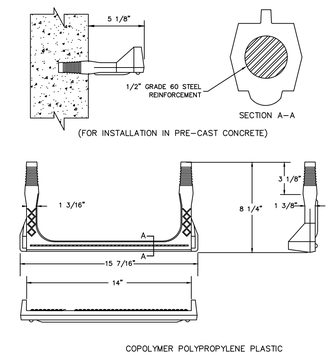

6 PLASTIC MANHOLE STEP
N.T.S

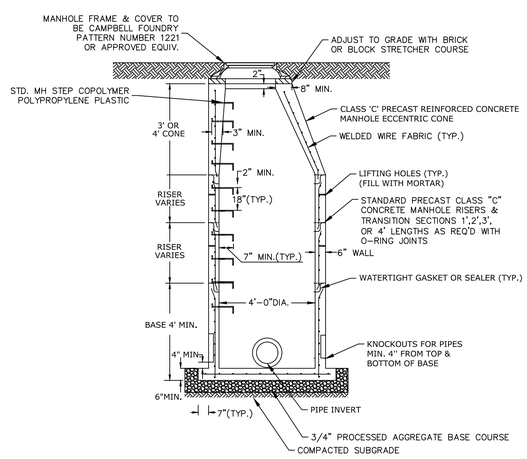

NOTES:
1. DIAMETER OF MANHOLE SHALL BE REVIEWED BY THE CONTRACTOR TO DETERMINE A LEGEND OF STANDARD MANHOLE DIMENSIONS WITH RESPECT TO PROPOSED PIPE SIZES, NUMBER AND GEOMETRTY. OVER SIZE MANHOLES SHALL BE INSTALLED IF MINIMUM 6" WALL DIMENSION BETWEEN PIPES IS NOT PROVIDED.
2. MANHOLES SHALL BE STANDARD PRECAST CONCRETE UNITS AND SHALL BE DESIGNED AND CONSTRUCTED BY THE MANUFACTURER TO SUPPORT TRUCK H–20 LOADING.

7 STORM MANHOLE
N.T.S.

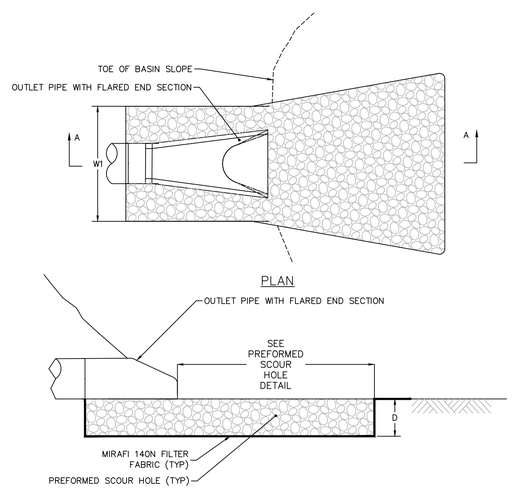

NOTES:
1. SEE GRADING AND DRAINAGE PLAN FOR SIZES OF FLARED END SECTION.

8 FLARED END SECTION
N.T.S.

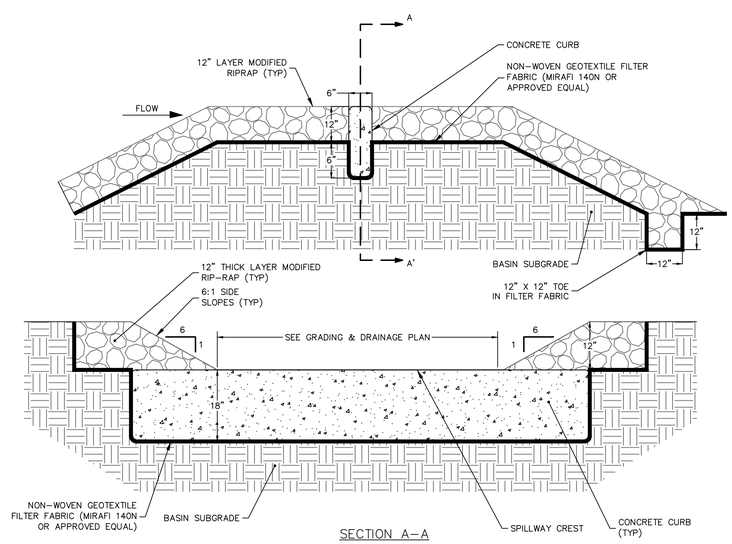

9 RIP-RAP EMERGENCY SPILLWAY
N.T.S

FOR PERMITTING ONLY, NOT FOR CONSTRUCTION

Date	Description	No.

Revisions

LANGAN
Langan Engineering and Environmental Services, Inc.
555 Long Wharf Drive
New Haven, CT 06511
T: 203.562.5771 F: 203.789.6142 www.langan.com

Project
NORTH BLOOMFIELD COMMERCE CENTER
116 WEST DUDLEY TOWN ROAD
MAP 16, LOT 43
BLOOMFIELD CONNECTICUT

APPLICANT/DEVELOPER:
NORTHPOINT DEVELOPMENT
3315 NORTH OAK TRAFFICWAY
KANSAS CITY, MO 64116

SUBMISSION PURPOSE: INLAND WETLANDS AND WATERCOURSES COMMISSION PERMIT APPLICATION

Drawing Title
GRADING & DRAINAGE DETAILS I

Project No.	Drawing No.
140255601	CG501
Date 12/08/2022	
Drawn By JMGM	
Checked By TSO	

Project No. 140255601

© 2022 Langan

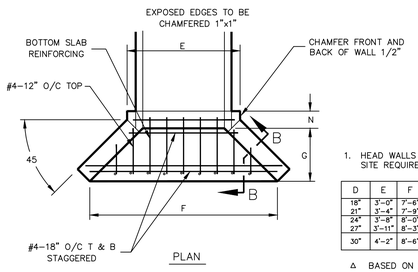

NOTES:

1. HEAD WALLS MAY BE PRECAST OR CAST IN PLACE PER SITE REQUIREMENTS.

D	E	F	G	H	J	K	L	N	R	Δ VOL. C.Y.
18"	3'–0"	7'–6"	3'–0"	3'–0"	2'–0"	8"	8"	8"	#5–12"o/c	1.70
21"	3'–4"	7'–9"		3'–3"	2'–0"					1.80
24"	3'–8"	8'–0"	3'–0"	3'–6"	2'–0"	8"	8"	8"	#5–12"o/c	1.90
27"	3'–11"	8'–3"		3'–9"	2'–0"					2.00
30"	4'–2"	8'–6"	3'–0"	4'–0"	2'–1"	8"	8"	10"	#5–12"o/c	2.85

Δ BASED ON 2:1 CHANNEL SIDE SLOPES.

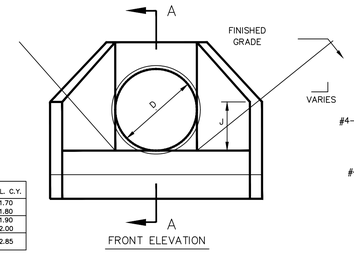

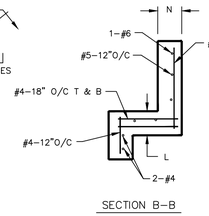

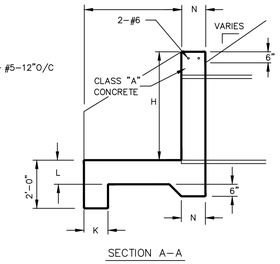

1 HEADWALL
N.T.S

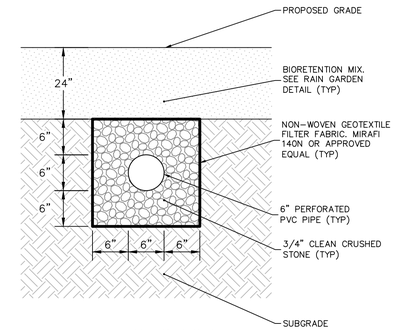

2 UNDERDRAIN
N.T.S.

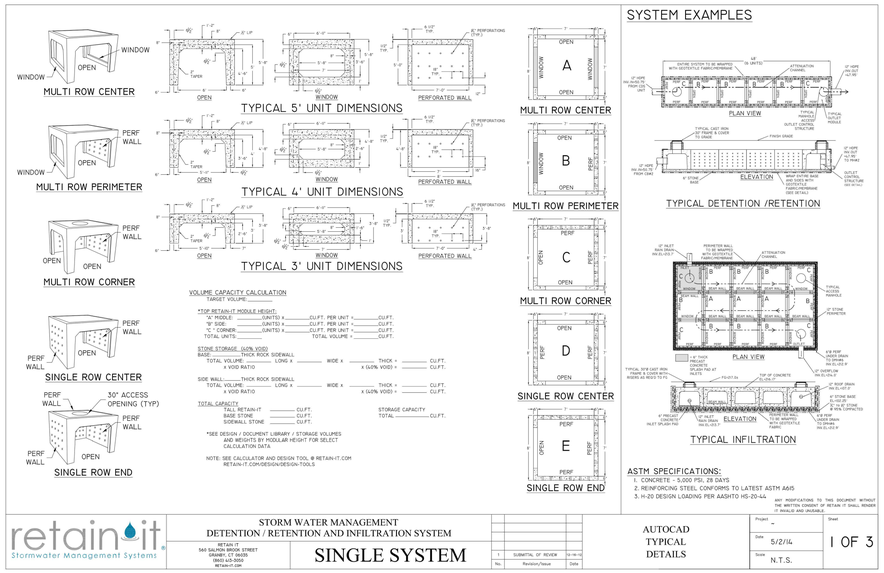

3 RETAIN-IT SYSTEM (USE 4' UNIT)
N.T.S.

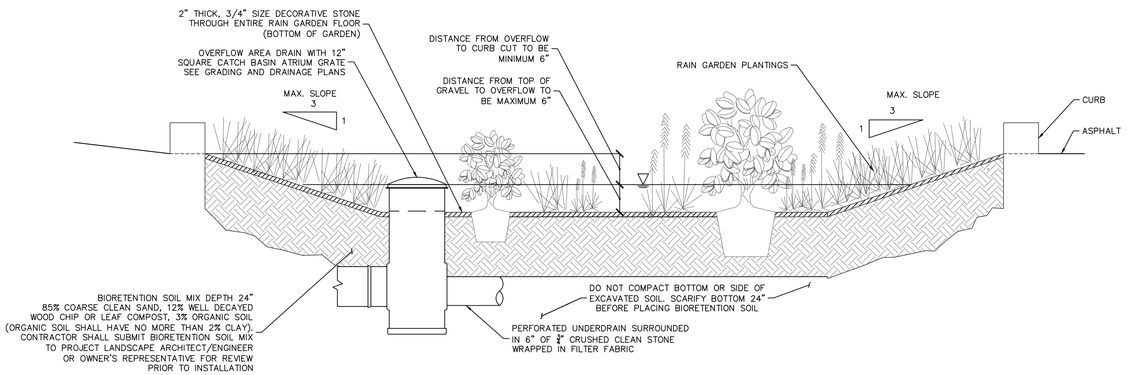

5 RAIN GARDEN
N.T.S

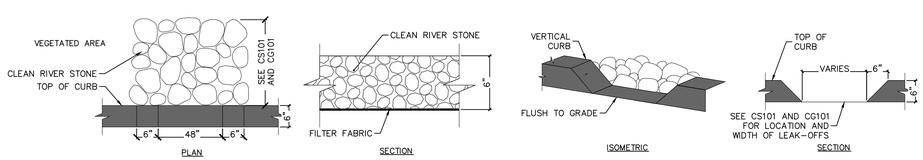

4 CURB LEAK-OFF
N.T.S.

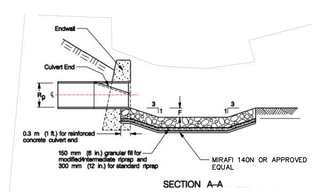

Figure 11-15 Preformed Scour Hole Type 1 and Type 2

May 2002 ConnDOT Drainage Manual

MINIMUM SCOUR HOLE SIZING

STRUCTURE	FES/HW DIAMETER (INCH)	d_0 (INCH)	TOP W [FT]	BOTTOM W [FT]	TOP L [FT]	BOTTOM L [FT]	RIPRAP [INCH]
HW A1–1	36"	36"	27	9	31.5	13.5	12" (MODIFIED)
HW B3–1	24"	24"	18	6	51	39	12" (MODIFIED)
HW D2–1	30"	30"	22.5	7.5	45.75	30.75	12" (MODIFIED)
FES D2–1	12"	12"	9	3	18.5	12.5	12" (MODIFIED)
FES D2–2	12"	12"	5	3	41.5	35.5	12" (MODIFIED)

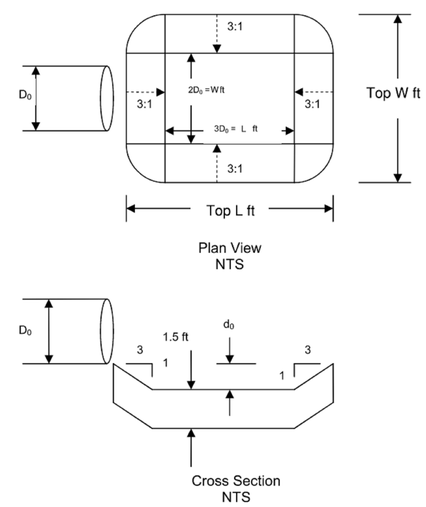

6 PREFORMED SCOUR HOLE
N.T.S.

FOR PERMITTING ONLY, NOT FOR CONSTRUCTION

Date	Description	No.

Revisions

LANGAN
Langan Engineering and Environmental Services, Inc.
555 Long Wharf Drive
New Haven, CT 06511
T: 203.562.5771 F: 203.789.6142 www.langan.com

Project
NORTH BLOOMFIELD COMMERCE CENTER
116 WEST DUDLEY TOWN ROAD
MAP 16, LOT 43
BLOOMFIELD CONNECTICUT

APPLICANT/DEVELOPER:
NORTHPOINT DEVELOPMENT
3315 NORTH OAK TRAFFICWAY
KANSAS CITY, MO 64116

SUBMISSION PURPOSE: INLAND WETLANDS AND WATERCOURSES COMMISSION PERMIT APPLICATION

Drawing Title
GRADING & DRAINAGE DETAILS II

Project No. 140255601
Date 12/08/2022
Drawn By JMGM
Checked By TSO
Drawing No. CG502

LANGAN
Project No. 140255601

© 2022 Langan

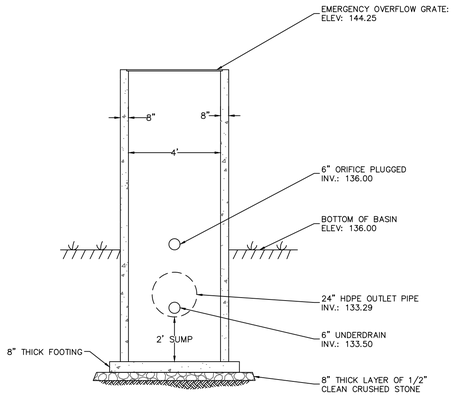

GRATE ELEVATION	144.25
BASIN BOTTOM ELEVATION	136.00
UNDERDRAIN DIAMETER	6"
UNDERDRAIN INVERT	133.50
OUTLET PIPE DIAMETER	24"
OUTLET PIPE INVERT	133.29

1 OUTLET CONTROL STRUCTURE A
N.T.S.

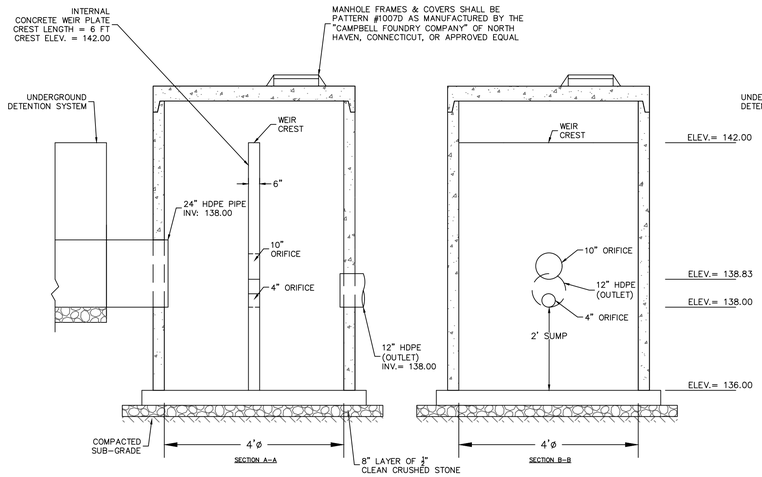

2 OUTLET CONTROL STRUCTURE B-1
N.T.S.

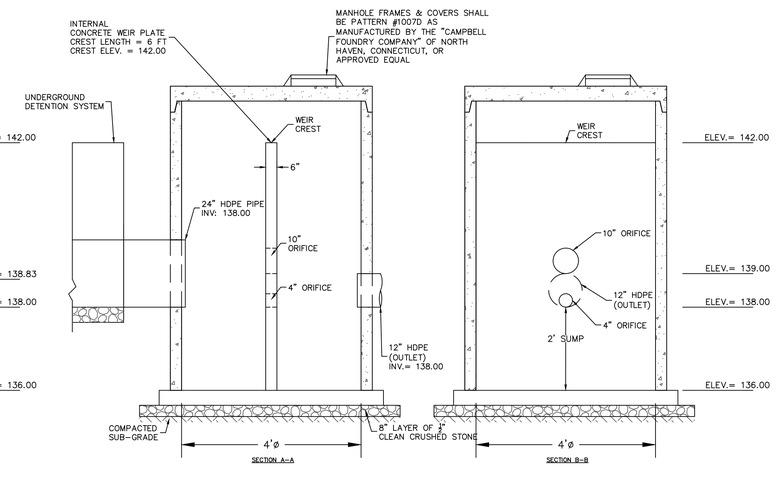

3 OUTLET CONTROL STRUCTURE B-2
N.T.S.

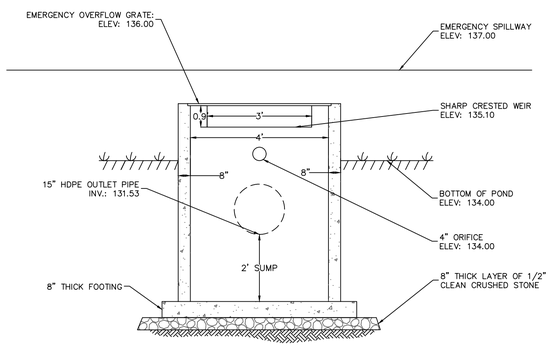

SPILLWAY ELEVATION	137.00
GRATE ELEVATION	136.00
WEIR CREST ELEVATION	135.10
4" ORIFICE	134.00
POND BOTTOM ELEVATION	134.00
OUTLET PIPE DIAMETER	15"
OUTLET PIPE INVERT	131.53

4 OUTLET CONTROL STRUCTURE B-3
N.T.S.

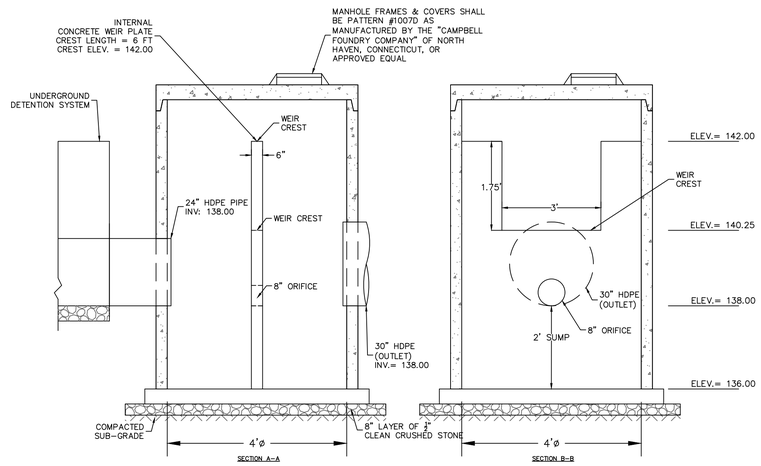

5 OUTLET CONTROL STRUCTURE D-1
N.T.S.

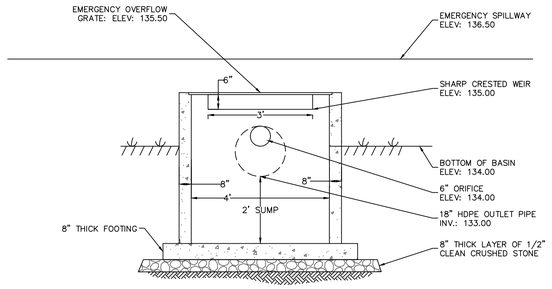

SPILLWAY ELEVATION	136.50
GRATE ELEVATION	135.50
WEIR CREST ELEVATION	135.00
6" ORIFICE	134.00
BASIN BOTTOM ELEVATION	134.00
OUTLET PIPE DIAMETER	18"
OUTLET PIPE INVERT	133.00

6 OUTLET CONTROL STRUCTURE D-2
N.T.S.

FOR PERMITTING ONLY, NOT FOR CONSTRUCTION

Date	Description	No.

Revisions

STATE OF CONNECTICUT
JOHN T. S. ORSINI
No. 23,800
LICENSED
PROFESSIONAL ENGINEER

LANGAN
Langan Engineering and Environmental Services, Inc.
555 Long Wharf Drive
New Haven, CT 06511
T: 203.562.5771 F: 203.789.6142 www.langan.com

Project
NORTH BLOOMFIELD COMMERCE CENTER
116 WEST DUDLEY TOWN ROAD
MAP 16, LOT 43
BLOOMFIELD CONNECTICUT

APPLICANT/DEVELOPER:
NORTHPOINT DEVELOPMENT
3315 NORTH OAK TRAFFICWAY
KANSAS CITY, MO 64116

SUBMISSION PURPOSE: INLAND WETLANDS AND WATERCOURSES COMMISSION PERMIT APPLICATION

Drawing Title
GRADING AND DRAINAGE DETAILS III

Project No. 140255601
Date 12/08/2022
Drawn By JMGM
Checked By TSO
Drawing No. CG503

LANGAN
Project No. 140255601

© 2022 Langan

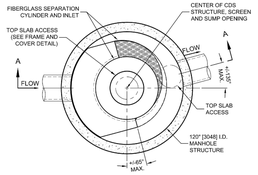

PLAN VIEW B-B
N.T.S.

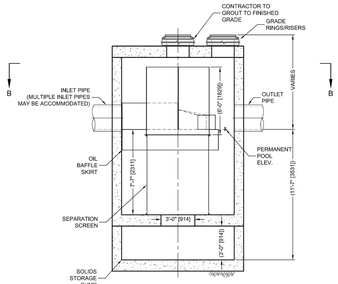

ELEVATION A-A
N.T.S.

CDS5668-10-C DESIGN NOTES

THE STANDARD CDS5668-10-C CONFIGURATION IS SHOWN. ALTERNATE CONFIGURATIONS ARE AVAILABLE AND ARE LISTED BELOW. SOME CONFIGURATIONS MAY BE COMBINED TO SUIT SITE REQUIREMENTS.

CONFIGURATION DESCRIPTION
GRATED INLET ONLY (NO INLET PIPE)
GRATED INLET WITH INLET PIPE OR PIPES
CURB INLET ONLY (NO INLET PIPE)
CURB INLET WITH INLET PIPE OR PIPES
SEPARATE OIL BAFFLE (SINGLE INLET PIPE REQUIRED FOR THIS CONFIGURATION)
SEDIMENT WEIR FOR NJDEP / NJCAT CONFORMING UNITS

FRAME AND COVER
(DIAMETER VARIES)
N.T.S.

SITE SPECIFIC DATA REQUIREMENTS

STRUCTURE ID			
WATER QUALITY FLOW RATE (CFS OR L/s)			*
PEAK FLOW RATE (CFS OR L/s)			*
RETURN PERIOD OF PEAK FLOW (YRS)			*
SCREEN APERTURE (2400 OR 4700)			*
PIPE DATA:	I.E.	MATERIAL	DIAMETER
INLET PIPE 1	*	*	*
INLET PIPE 2	*	*	*
OUTLET PIPE	*	*	*
RIM ELEVATION			*
ANTI-FLOTATION BALLAST	WIDTH	HEIGHT	
	*	*	

NOTES/SPECIAL REQUIREMENTS:

* PER ENGINEER OF RECORD

GENERAL NOTES
1. CONTECH TO PROVIDE ALL MATERIALS UNLESS NOTED OTHERWISE.
2. DIMENSIONS MARKED WITH ( ) ARE REFERENCE DIMENSIONS. ACTUAL DIMENSIONS MAY VARY.
3. FOR FABRICATION DRAWINGS WITH DETAILED STRUCTURE DIMENSIONS AND WEIGHTS, PLEASE CONTACT YOUR CONTECH ENGINEERED SOLUTIONS LLC REPRESENTATIVE. www.contechES.com
4. CDS WATER QUALITY STRUCTURE SHALL BE IN ACCORDANCE WITH ALL DESIGN DATA AND INFORMATION CONTAINED IN THIS DRAWING.
5. STRUCTURE SHALL MEET AASHTO HS20 AND CASTINGS SHALL MEET HS20 (AASHTO M 306) LOAD RATING, ASSUMING GROUNDWATER ELEVATION AT, OR BELOW, THE OUTLET PIPE INVERT ELEVATION. ENGINEER OF RECORD TO CONFIRM ACTUAL GROUNDWATER ELEVATION.
6. PVC HYDRAULIC SHEAR PLATE IS PLACED ON SHELF AT BOTTOM OF SCREEN CYLINDER. REMOVE AND REPLACE AS NECESSARY DURING MAINTENANCE CLEANING.

INSTALLATION NOTES
A. ANY SUB-BASE, BACKFILL DEPTH, AND/OR ANTI-FLOTATION PROVISIONS ARE SITE-SPECIFIC DESIGN CONSIDERATIONS AND SHALL BE SPECIFIED BY ENGINEER OF RECORD.
B. CONTRACTOR TO PROVIDE EQUIPMENT WITH SUFFICIENT LIFTING AND REACH CAPACITY TO LIFT AND SET THE CDS MANHOLE STRUCTURE (LIFTING CLUTCHES PROVIDED).
C. CONTRACTOR TO ADD JOINT SEALANT BETWEEN ALL STRUCTURE SECTIONS, AND ASSEMBLE STRUCTURE.
D. CONTRACTOR TO PROVIDE, INSTALL, AND GROUT PIPES. MATCH PIPE INVERTS WITH ELEVATIONS SHOWN.
E. CONTRACTOR TO TAKE APPROPRIATE MEASURES TO ASSURE UNIT IS WATER TIGHT, HOLDING WATER TO FLOWLINE INVERT MINIMUM. IT IS SUGGESTED THAT ALL JOINTS BELOW PIPE INVERTS ARE GROUTED.

CONTECH ENGINEERED SOLUTIONS LLC
www.contechES.com
9025 Centre Pointe Dr., Suite 400, West Chester, OH 45069
800-338-1122 513-645-7000 513-645-7993 FAX

CDS5668-10-C
INLINE CDS
STANDARD DETAIL

C:\USERS\SCALADYSTEVE\DESKTOP\CDS DETAILS 180 MICRON SERIES\ACAD\CDS5668-10-C-DTL.DWG 5/19/2014 5:38 PM

THE PRINCIPLE OF OPERATION OF THE CONTECH STORMFILTER SYSTEM IS PATENTED. THE CDS TECHNOLOGY IS PATENTED OR PATENT PENDING. CONTECH'S CDS WATER QUALITY FLOW RATE IS BASED ON PATENTED OR PATENT PENDING TECHNOLOGY.

WATER QUALITY UNIT (MH A1-1)
N.T.S.

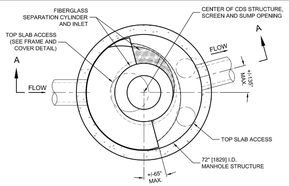

PLAN VIEW B-B
N.T.S.

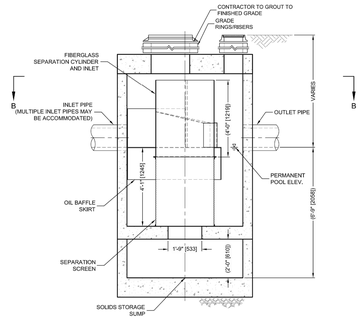

ELEVATION A-A
N.T.S.

CDS3035-6-C DESIGN NOTES

THE STANDARD CDS3035-6-C CONFIGURATION IS SHOWN. ALTERNATE CONFIGURATIONS ARE AVAILABLE AND ARE LISTED BELOW. SOME CONFIGURATIONS MAY BE COMBINED TO SUIT SITE REQUIREMENTS.

CONFIGURATION DESCRIPTION
GRATED INLET ONLY (NO INLET PIPE)
GRATED INLET WITH INLET PIPE OR PIPES
CURB INLET ONLY (NO INLET PIPE)
CURB INLET WITH INLET PIPE OR PIPES
SEPARATE OIL BAFFLE (SINGLE INLET PIPE REQUIRED FOR THIS CONFIGURATION)
SEDIMENT WEIR FOR NJDEP / NJCAT CONFORMING UNITS

FRAME AND COVER
(DIAMETER VARIES)
N.T.S.

SITE SPECIFIC DATA REQUIREMENTS

STRUCTURE ID			
WATER QUALITY FLOW RATE (CFS OR L/s)			*
PEAK FLOW RATE (CFS OR L/s)			*
RETURN PERIOD OF PEAK FLOW (YRS)			*
SCREEN APERTURE (2400 OR 4700)			*
PIPE DATA:	I.E.	MATERIAL	DIAMETER
INLET PIPE 1	*	*	*
INLET PIPE 2	*	*	*
OUTLET PIPE	*	*	*
RIM ELEVATION			*
ANTI-FLOTATION BALLAST	WIDTH	HEIGHT	
	*	*	

NOTES/SPECIAL REQUIREMENTS:

* PER ENGINEER OF RECORD

GENERAL NOTES
1. CONTECH TO PROVIDE ALL MATERIALS UNLESS NOTED OTHERWISE.
2. DIMENSIONS MARKED WITH ( ) ARE REFERENCE DIMENSIONS. ACTUAL DIMENSIONS MAY VARY.
3. FOR FABRICATION DRAWINGS WITH DETAILED STRUCTURE DIMENSIONS AND WEIGHTS, PLEASE CONTACT YOUR CONTECH ENGINEERED SOLUTIONS LLC REPRESENTATIVE. www.contechES.com
4. CDS WATER QUALITY STRUCTURE SHALL BE IN ACCORDANCE WITH ALL DESIGN DATA AND INFORMATION CONTAINED IN THIS DRAWING.
5. STRUCTURE SHALL MEET AASHTO HS20 AND CASTINGS SHALL MEET HS20 (AASHTO M 306) LOAD RATING, ASSUMING GROUNDWATER ELEVATION AT, OR BELOW, THE OUTLET PIPE INVERT ELEVATION. ENGINEER OF RECORD TO CONFIRM ACTUAL GROUNDWATER ELEVATION.
6. PVC HYDRAULIC SHEAR PLATE IS PLACED ON SHELF AT BOTTOM OF SCREEN CYLINDER. REMOVE AND REPLACE AS NECESSARY DURING MAINTENANCE CLEANING.

INSTALLATION NOTES
A. ANY SUB-BASE, BACKFILL DEPTH, AND/OR ANTI-FLOTATION PROVISIONS ARE SITE-SPECIFIC DESIGN CONSIDERATIONS AND SHALL BE SPECIFIED BY ENGINEER OF RECORD.
B. CONTRACTOR TO PROVIDE EQUIPMENT WITH SUFFICIENT LIFTING AND REACH CAPACITY TO LIFT AND SET THE CDS MANHOLE STRUCTURE (LIFTING CLUTCHES PROVIDED).
C. CONTRACTOR TO ADD JOINT SEALANT BETWEEN ALL STRUCTURE SECTIONS, AND ASSEMBLE STRUCTURE.
D. CONTRACTOR TO PROVIDE, INSTALL, AND GROUT PIPES. MATCH PIPE INVERTS WITH ELEVATIONS SHOWN.
E. CONTRACTOR TO TAKE APPROPRIATE MEASURES TO ASSURE UNIT IS WATER TIGHT, HOLDING WATER TO FLOWLINE INVERT MINIMUM. IT IS SUGGESTED THAT ALL JOINTS BELOW PIPE INVERTS ARE GROUTED.

CONTECH ENGINEERED SOLUTIONS LLC
www.contechES.com
9025 Centre Pointe Dr., Suite 400, West Chester, OH 45069
800-338-1122 513-645-7000 513-645-7993 FAX

CDS3035-6-C
INLINE CDS
STANDARD DETAIL

C:\USERS\SCALADYSTEVE\DESKTOP\CDS DETAILS 180 MICRON SERIES\ACAD\CDS3035-6-C-DTL.DWG 5/19/2014 5:53 PM

THE PRINCIPLE OF OPERATION OF THE CONTECH STORMFILTER SYSTEM IS PATENTED. THE CDS TECHNOLOGY IS PATENTED OR PATENT PENDING. CONTECH'S CDS WATER QUALITY FLOW RATE IS BASED ON PATENTED OR PATENT PENDING TECHNOLOGY.

WATER QUALITY UNIT (MH B3-1)
N.T.S.

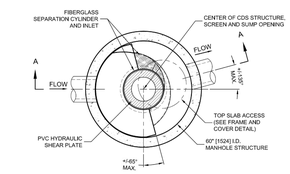

PLAN VIEW B-B
N.T.S.

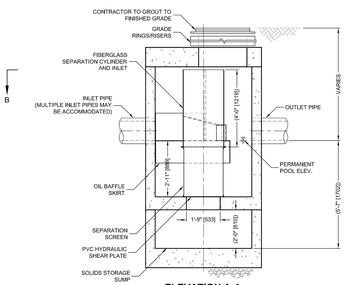

ELEVATION A-A
N.T.S.

CDS2025-5-C DESIGN NOTES

THE STANDARD CDS2025-5-C CONFIGURATION IS SHOWN. ALTERNATE CONFIGURATIONS ARE AVAILABLE AND ARE LISTED BELOW. SOME CONFIGURATIONS MAY BE COMBINED TO SUIT SITE REQUIREMENTS.

CONFIGURATION DESCRIPTION
GRATED INLET ONLY (NO INLET PIPE)
GRATED INLET WITH INLET PIPE OR PIPES
CURB INLET ONLY (NO INLET PIPE)
CURB INLET WITH INLET PIPE OR PIPES
SEPARATE OIL BAFFLE (SINGLE INLET PIPE REQUIRED FOR THIS CONFIGURATION)
SEDIMENT WEIR FOR NJDEP / NJCAT CONFORMING UNITS

FRAME AND COVER
(DIAMETER VARIES)
N.T.S.

SITE SPECIFIC DATA REQUIREMENTS

STRUCTURE ID			
WATER QUALITY FLOW RATE (CFS OR L/s)			*
PEAK FLOW RATE (CFS OR L/s)			*
RETURN PERIOD OF PEAK FLOW (YRS)			*
SCREEN APERTURE (2400 OR 4700)			*
PIPE DATA:	I.E.	MATERIAL	DIAMETER
INLET PIPE 1	*	*	*
INLET PIPE 2	*	*	*
OUTLET PIPE	*	*	*
RIM ELEVATION			*
ANTI-FLOTATION BALLAST	WIDTH	HEIGHT	
	*	*	

NOTES/SPECIAL REQUIREMENTS:

* PER ENGINEER OF RECORD

GENERAL NOTES
1. CONTECH TO PROVIDE ALL MATERIALS UNLESS NOTED OTHERWISE.
2. DIMENSIONS MARKED WITH ( ) ARE REFERENCE DIMENSIONS. ACTUAL DIMENSIONS MAY VARY.
3. FOR FABRICATION DRAWINGS WITH DETAILED STRUCTURE DIMENSIONS AND WEIGHTS, PLEASE CONTACT YOUR CONTECH ENGINEERED SOLUTIONS LLC REPRESENTATIVE. www.contechES.com
4. CDS WATER QUALITY STRUCTURE SHALL BE IN ACCORDANCE WITH ALL DESIGN DATA AND INFORMATION CONTAINED IN THIS DRAWING.
5. STRUCTURE SHALL MEET AASHTO HS20 AND CASTINGS SHALL MEET HS20 (AASHTO M 306) LOAD RATING, ASSUMING GROUNDWATER ELEVATION AT, OR BELOW, THE OUTLET PIPE INVERT ELEVATION. ENGINEER OF RECORD TO CONFIRM ACTUAL GROUNDWATER ELEVATION.
6. PVC HYDRAULIC SHEAR PLATE IS PLACED ON SHELF AT BOTTOM OF SCREEN CYLINDER. REMOVE AND REPLACE AS NECESSARY DURING MAINTENANCE CLEANING.

INSTALLATION NOTES
A. ANY SUB-BASE, BACKFILL DEPTH, AND/OR ANTI-FLOTATION PROVISIONS ARE SITE-SPECIFIC DESIGN CONSIDERATIONS AND SHALL BE SPECIFIED BY ENGINEER OF RECORD.
B. CONTRACTOR TO PROVIDE EQUIPMENT WITH SUFFICIENT LIFTING AND REACH CAPACITY TO LIFT AND SET THE CDS MANHOLE STRUCTURE (LIFTING CLUTCHES PROVIDED).
C. CONTRACTOR TO ADD JOINT SEALANT BETWEEN ALL STRUCTURE SECTIONS, AND ASSEMBLE STRUCTURE.
D. CONTRACTOR TO PROVIDE, INSTALL, AND GROUT PIPES. MATCH PIPE INVERTS WITH ELEVATIONS SHOWN.
E. CONTRACTOR TO TAKE APPROPRIATE MEASURES TO ASSURE UNIT IS WATER TIGHT, HOLDING WATER TO FLOWLINE INVERT MINIMUM. IT IS SUGGESTED THAT ALL JOINTS BELOW PIPE INVERTS ARE GROUTED.

CONTECH ENGINEERED SOLUTIONS LLC
www.contechES.com
9025 Centre Pointe Dr., Suite 400, West Chester, OH 45069
800-338-1122 513-645-7000 513-645-7993 FAX

CDS2025-5-C
INLINE CDS
STANDARD DETAIL

C:\USERS\SCALADYSTEVE\DESKTOP\CDS DETAILS 180 MICRON SERIES\ACAD\CDS2025-5-C-DTL.DWG 5/19/2014 5:29 PM

THE PRINCIPLE OF OPERATION OF THE CONTECH STORMFILTER SYSTEM IS PATENTED. THE CDS TECHNOLOGY IS PATENTED OR PATENT PENDING. CONTECH'S CDS WATER QUALITY FLOW RATE IS BASED ON PATENTED OR PATENT PENDING TECHNOLOGY.

WATER QUALITY UNIT (MH D1-1)
N.T.S.

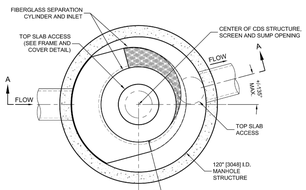

PLAN VIEW B-B
N.T.S.

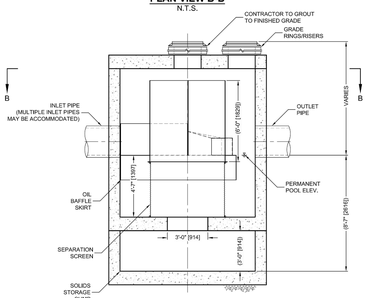

ELEVATION A-A
N.T.S.

CDS5640-10-C DESIGN NOTES

THE STANDARD CDS5640-10-C CONFIGURATION IS SHOWN. ALTERNATE CONFIGURATIONS ARE AVAILABLE AND ARE LISTED BELOW. SOME CONFIGURATIONS MAY BE COMBINED TO SUIT SITE REQUIREMENTS.

CONFIGURATION DESCRIPTION
GRATED INLET ONLY (NO INLET PIPE)
GRATED INLET WITH INLET PIPE OR PIPES
CURB INLET ONLY (NO INLET PIPE)
CURB INLET WITH INLET PIPE OR PIPES
SEPARATE OIL BAFFLE (SINGLE INLET PIPE REQUIRED FOR THIS CONFIGURATION)
SEDIMENT WEIR FOR NJDEP / NJCAT CONFORMING UNITS

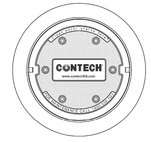

FRAME AND COVER
(DIAMETER VARIES)
N.T.S.

SITE SPECIFIC DATA REQUIREMENTS

STRUCTURE ID			
WATER QUALITY FLOW RATE (CFS OR L/s)			*
PEAK FLOW RATE (CFS OR L/s)			*
RETURN PERIOD OF PEAK FLOW (YRS)			*
SCREEN APERTURE (2400 OR 4700)			*
PIPE DATA:	I.E.	MATERIAL	DIAMETER
INLET PIPE 1	*	*	*
INLET PIPE 2	*	*	*
OUTLET PIPE	*	*	*
RIM ELEVATION			*
ANTI-FLOTATION BALLAST	WIDTH	HEIGHT	
	*	*	

NOTES/SPECIAL REQUIREMENTS:

* PER ENGINEER OF RECORD

GENERAL NOTES
1. CONTECH TO PROVIDE ALL MATERIALS UNLESS NOTED OTHERWISE.
2. DIMENSIONS MARKED WITH ( ) ARE REFERENCE DIMENSIONS. ACTUAL DIMENSIONS MAY VARY.
3. FOR FABRICATION DRAWINGS WITH DETAILED STRUCTURE DIMENSIONS AND WEIGHTS, PLEASE CONTACT YOUR CONTECH ENGINEERED SOLUTIONS LLC REPRESENTATIVE. www.contechES.com
4. CDS WATER QUALITY STRUCTURE SHALL BE IN ACCORDANCE WITH ALL DESIGN DATA AND INFORMATION CONTAINED IN THIS DRAWING.
5. STRUCTURE SHALL MEET AASHTO HS20 AND CASTINGS SHALL MEET HS20 (AASHTO M 306) LOAD RATING, ASSUMING GROUNDWATER ELEVATION AT, OR BELOW, THE OUTLET PIPE INVERT ELEVATION. ENGINEER OF RECORD TO CONFIRM ACTUAL GROUNDWATER ELEVATION.
6. PVC HYDRAULIC SHEAR PLATE IS PLACED ON SHELF AT BOTTOM OF SCREEN CYLINDER. REMOVE AND REPLACE AS NECESSARY DURING MAINTENANCE CLEANING.

INSTALLATION NOTES
A. ANY SUB-BASE, BACKFILL DEPTH, AND/OR ANTI-FLOTATION PROVISIONS ARE SITE-SPECIFIC DESIGN CONSIDERATIONS AND SHALL BE SPECIFIED BY ENGINEER OF RECORD.
B. CONTRACTOR TO PROVIDE EQUIPMENT WITH SUFFICIENT LIFTING AND REACH CAPACITY TO LIFT AND SET THE CDS MANHOLE STRUCTURE (LIFTING CLUTCHES PROVIDED).
C. CONTRACTOR TO ADD JOINT SEALANT BETWEEN ALL STRUCTURE SECTIONS, AND ASSEMBLE STRUCTURE.
D. CONTRACTOR TO PROVIDE, INSTALL, AND GROUT PIPES. MATCH PIPE INVERTS WITH ELEVATIONS SHOWN.
E. CONTRACTOR TO TAKE APPROPRIATE MEASURES TO ASSURE UNIT IS WATER TIGHT, HOLDING WATER TO FLOWLINE INVERT MINIMUM. IT IS SUGGESTED THAT ALL JOINTS BELOW PIPE INVERTS ARE GROUTED.

CONTECH ENGINEERED SOLUTIONS LLC
www.contechES.com
9025 Centre Pointe Dr., Suite 400, West Chester, OH 45069
800-338-1122 513-645-7000 513-645-7993 FAX

CDS5640-10-C
INLINE CDS
STANDARD DETAIL

C:\USERS\SCALADYSTEVE\DESKTOP\CDS DETAILS 180 MICRON SERIES\ACAD\CDS5640-10-C-DTL.DWG 5/19/2014 5:37 PM

THE PRINCIPLE OF OPERATION OF THE CONTECH STORMFILTER SYSTEM IS PATENTED. THE CDS TECHNOLOGY IS PATENTED OR PATENT PENDING. CONTECH'S CDS WATER QUALITY FLOW RATE IS BASED ON PATENTED OR PATENT PENDING TECHNOLOGY.

WATER QUALITY UNIT (CLCB D1-1A)
N.T.S.

FOR PERMITTING ONLY, NOT FOR CONSTRUCTION

Date	Description	No.

Revisions

STATE OF CONNECTICUT · TIMOTHY S. OGDEN · No. 23,800 · LICENSED PROFESSIONAL ENGINEER

LANGAN
Langan Engineering and Environmental Services, Inc.
555 Long Wharf Drive
New Haven, CT 06511
T: 203.562.5771 F: 203.789.6142 www.langan.com

Project
NORTH BLOOMFIELD COMMERCE CENTER
116 WEST DUDLEY TOWN ROAD
MAP 16, LOT 43
BLOOMFIELD CONNECTICUT

APPLICANT/DEVELOPER:
NORTHPOINT DEVELOPMENT
3315 NORTH OAK TRAFFICWAY
KANSAS CITY, MO 64116

SUBMISSION PURPOSE: INLAND WETLANDS AND WATERCOURSES COMMISSION PERMIT APPLICATION

Drawing Title
GRADING AND DRAINAGE DETAILS IV

Project No. 140255601	Drawing No. CG504
Date 12/08/2022	
Drawn By JMGM	
Checked By TSO	

Project No. 140255601

© 2022 Langan

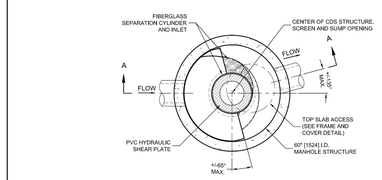

PLAN VIEW B-B
N.T.S.

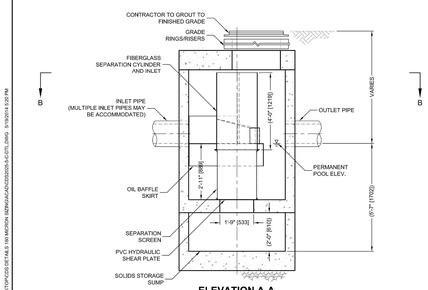

ELEVATION A-A
N.T.S.

CDS2025-5-C DESIGN NOTES

THE STANDARD CDS2025-5-C CONFIGURATION IS SHOWN. ALTERNATE CONFIGURATIONS ARE AVAILABLE AND ARE LISTED BELOW. SOME CONFIGURATIONS MAY BE COMBINED TO SUIT SITE REQUIREMENTS.

CONFIGURATION DESCRIPTION
GRATED INLET ONLY (NO INLET PIPE)
GRATED INLET WITH INLET PIPE OR PIPES
CURB INLET ONLY (NO INLET PIPE)
CURB INLET WITH INLET PIPE OR PIPES
SEPARATE OIL BAFFLE (SINGLE INLET PIPE REQUIRED FOR THIS CONFIGURATION)
SEDIMENT WEIR FOR NJDEP / NJCAT CONFORMING UNITS

FRAME AND COVER
(DIAMETER VARIES)
N.T.S.

SITE SPECIFIC DATA REQUIREMENTS

STRUCTURE ID			
WATER QUALITY FLOW RATE (CFS OR L/s)			*
PEAK FLOW RATE (CFS OR L/s)			*
RETURN PERIOD OF PEAK FLOW (YRS)			*
SCREEN APERTURE (2400 OR 4700)			*
PIPE DATA:	I.E.	MATERIAL	DIAMETER
INLET PIPE 1	*	*	*
INLET PIPE 2	*	*	*
OUTLET PIPE	*	*	*
RIM ELEVATION			*
ANTI-FLOTATION BALLAST	WIDTH	HEIGHT	
	*	*	

NOTES/SPECIAL REQUIREMENTS:

* PER ENGINEER OF RECORD

GENERAL NOTES
1. CONTECH TO PROVIDE ALL MATERIALS UNLESS NOTED OTHERWISE.
2. DIMENSIONS MARKED WITH ( ) ARE REFERENCE DIMENSIONS. ACTUAL DIMENSIONS MAY VARY.
3. FOR FABRICATION DRAWINGS WITH DETAILED STRUCTURE DIMENSIONS AND WEIGHTS, PLEASE CONTACT YOUR CONTECH ENGINEERED SOLUTIONS LLC REPRESENTATIVE. www.conteches.com
4. CDS WATER QUALITY STRUCTURE SHALL BE IN ACCORDANCE WITH ALL DESIGN DATA AND INFORMATION CONTAINED IN THIS DRAWING.
5. STRUCTURE SHALL MEET AASHTO HS20 AND CASTINGS SHALL MEET HS20 (AASHTO M 306) LOAD RATING, ASSUMING GROUNDWATER ELEVATION AT, OR BELOW, THE OUTLET PIPE INVERT ELEVATION. ENGINEER OF RECORD TO CONFIRM ACTUAL GROUNDWATER ELEVATION.
6. PVC HYDRAULIC SHEAR PLATE IS PLACED ON SHELF AT BOTTOM OF SCREEN CYLINDER. REMOVE AND REPLACE AS NECESSARY DURING MAINTENANCE CLEANING.

INSTALLATION NOTES
A. ANY SIDE-SIDE, BACKFILL DEPTH, AND/OR ANTI-FLOTATION PROVISIONS ARE SITE-SPECIFIC DESIGN CONSIDERATIONS AND SHALL BE SPECIFIED BY ENGINEER OF RECORD.
B. CONTRACTOR TO PROVIDE EQUIPMENT WITH SUFFICIENT LIFTING AND REACH CAPACITY TO LIFT AND SET THE CDS MANHOLE STRUCTURE (LIFTING CLUTCHES PROVIDED).
C. CONTRACTOR TO ADD JOINT SEALANT BETWEEN ALL STRUCTURE SECTIONS, AND ASSEMBLE STRUCTURE.
D. CONTRACTOR TO PROVIDE, INSTALL, AND GROUT PIPES. MATCH PIPE INVERTS WITH ELEVATIONS SHOWN.
E. CONTRACTOR TO TAKE APPROPRIATE MEASURES TO ASSURE UMT IS WATER TIGHT, HOLDING WATER TO FLOWLINE INVERT MINIMUM. IT IS SUGGESTED THAT ALL JOINTS BELOW PIPE INVERTS ARE GROUTED.

CONTECH ENGINEERED SOLUTIONS LLC
www.conteches.com
9025 Centre Pointe Dr., Suite 400, West Chester, OH 45069
800-338-1122 513-645-7000 513-645-7993 FAX

CDS2025-5-C
INLINE CDS
STANDARD DETAIL

C:\USERS\SCHLACHTER\DESKTOP\CDS 2025\BOX\CDS2025-5-C-CTU.DWG 5/10/2014 5:00 PM

THE PRODUCTS STATED AND SHOWN ON THIS DRAWING HAVE BEEN DESIGNED TO MEET THE PERFORMANCE CLAIMS OF CONTECH ENGINEERED SOLUTIONS LLC.

WATER QUALITY UNIT (MH D2-1)

1

N.T.S.

FOR PERMITTING ONLY, NOT FOR CONSTRUCTION

Date	Description	No.

Revisions

STATE OF CONNECTICUT · TIMOTHY S. ORGERY · No. 28,800 · LICENSED PROFESSIONAL ENGINEER

LANGAN
Langan Engineering and Environmental Services, Inc.
555 Long Wharf Drive
New Haven, CT 06511
T: 203.562.5771 F: 203.789.6142 www.langan.com

Project
NORTH BLOOMFIELD COMMERCE CENTER
116 WEST DUDLEY TOWN ROAD
MAP 16, LOT 43
BLOOMFIELD CONNECTICUT

APPLICANT/DEVELOPER:
NORTHPOINT DEVELOPMENT
3315 NORTH OAK TRAFFICWAY
KANSAS CITY, MO 64116

SUBMISSION PURPOSE: INLAND WETLANDS AND WATERCOURSES COMMISSION PERMIT APPLICATION

Drawing Title
GRADING & DRAINAGE DETAILS V

Project No.	Drawing No.
140255601	CG505
Date: 12/08/2022	
Drawn By: JMGM	
Checked By: TSO	

LANGAN

Project No. 140255601

© 2022 Langan

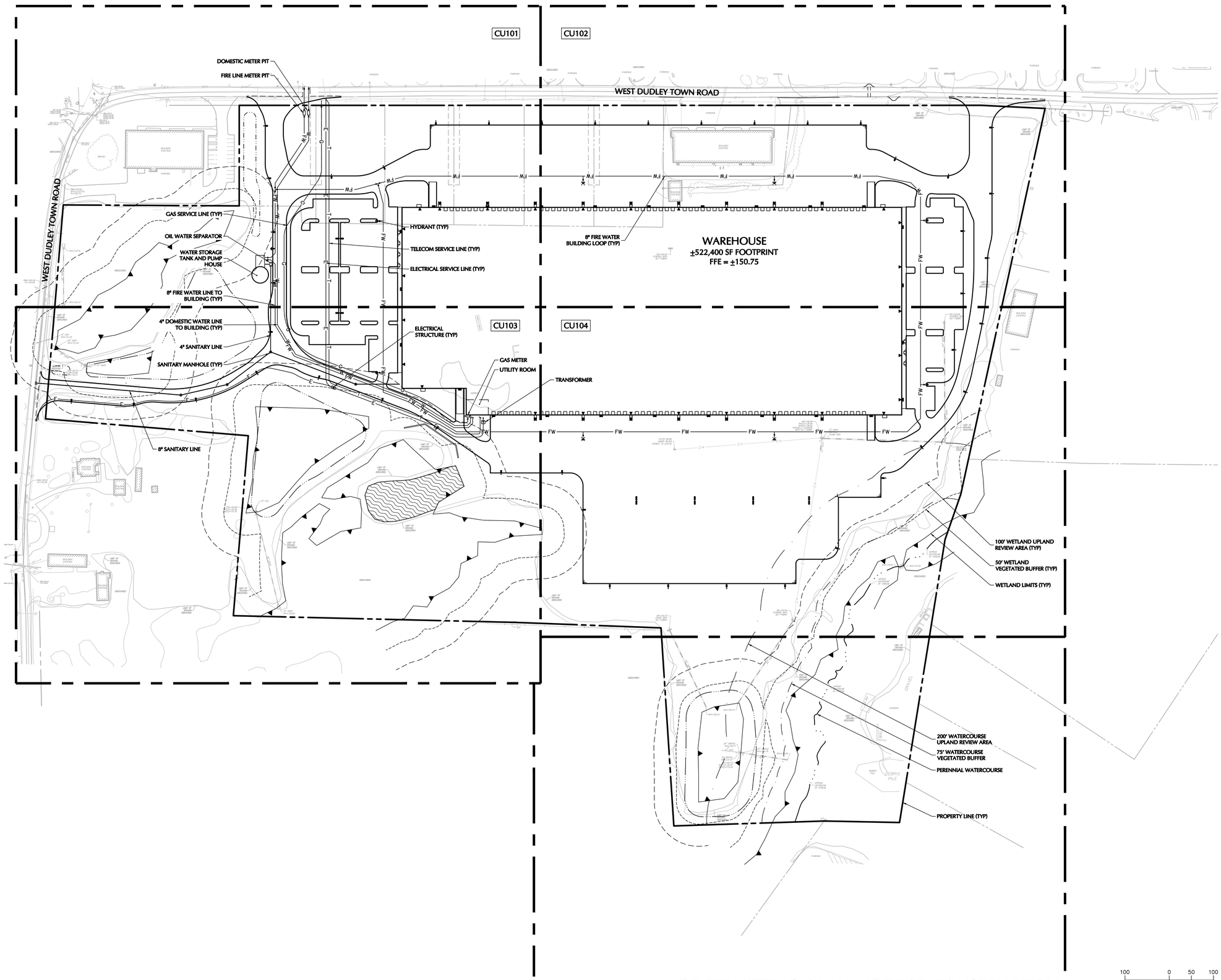

SHEET LEGEND

1" = 1,000'

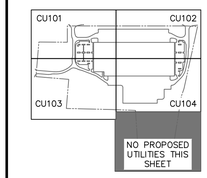

Date	Description	No.

Revisions

STATE OF CONNECTICUT
DANIEL S. GRIFFIN
No. 25140
LICENSED
PROFESSIONAL ENGINEER

LANGAN

Langan Engineering and Environmental Services, Inc.

555 Long Wharf Drive
New Haven, CT 06511

T: 203.562.5771 F: 203.789.6142 www.langan.com

Project

NORTH BLOOMFIELD COMMERCE CENTER

116 WEST DUDLEY TOWN ROAD
MAP 16, LOT 43

BLOOMFIELD CONNECTICUT

APPLICANT/DEVELOPER:
NORTHPOINT DEVELOPMENT
3315 NORTH OAK TRAFFICWAY
KANSAS CITY, MO 64116

SUBMISSION PURPOSE: INLAND WETLANDS AND WATERCOURSES COMMISSION PERMIT APPLICATION

Drawing Title

OVERALL UTILITY PLAN

Project No.	Drawing No.
140255601	CU100
Date: 12/08/2022	
Drawn By: CMD	
Checked By: DTG	

100 0 50 100
SCALE IN FEET

FOR PERMITTING ONLY, NOT FOR CONSTRUCTION

Project No. 140255601

© 2022 Langan

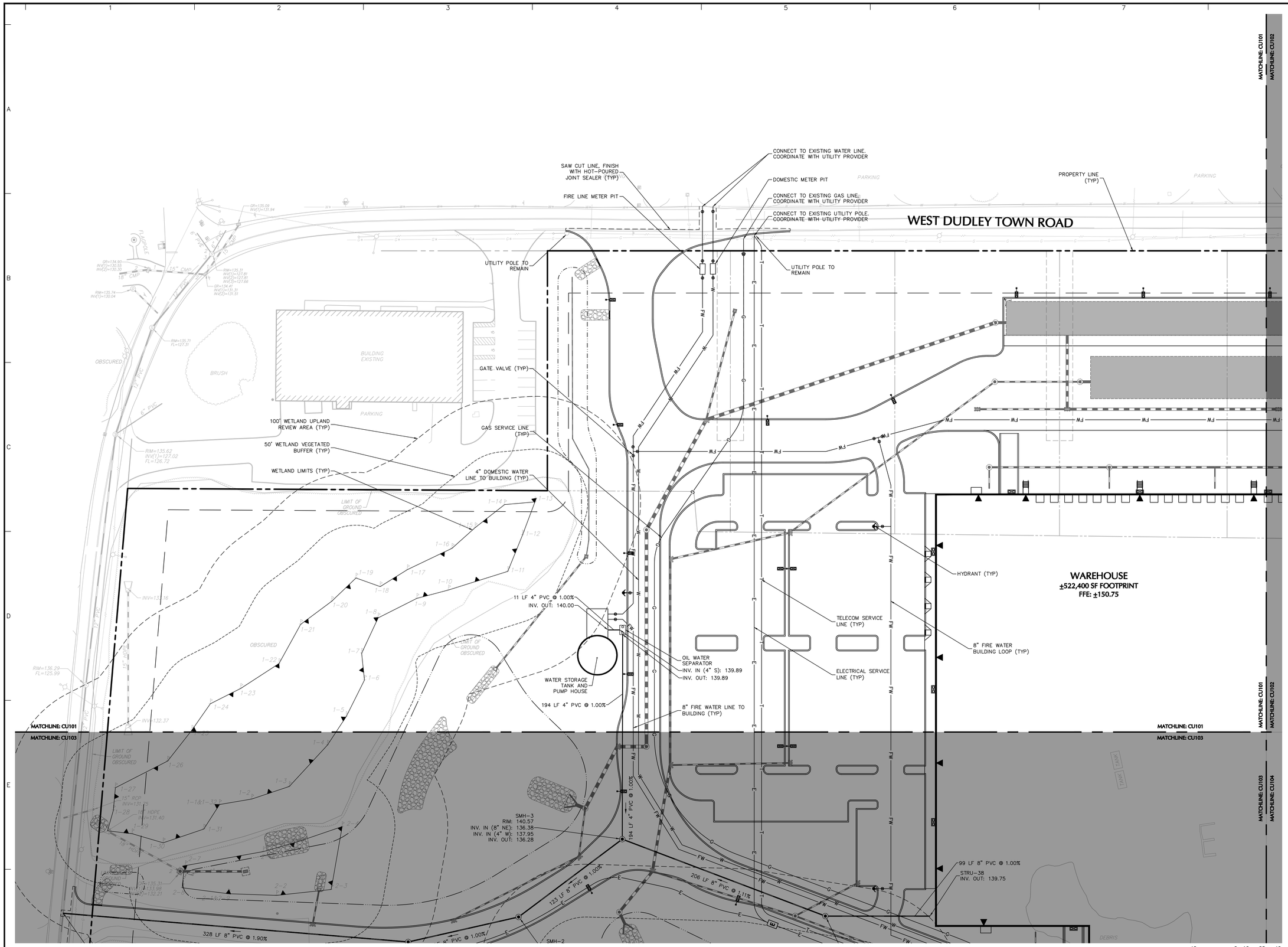

FOR PERMITTING ONLY, NOT FOR CONSTRUCTION

SHEET LEGEND
1" = 1,000'

CU101 | CU102 | CU103 | CU104

NO PROPOSED UTILITIES THIS SHEET

Date	Description	No.

Revisions

STATE OF CONNECTICUT · TIMOTHY S. OSBORNE · No. 25400 · LICENSED PROFESSIONAL ENGINEER

LANGAN
Langan Engineering and Environmental Services, Inc.
555 Long Wharf Drive
New Haven, CT 06511
T: 203.562.5771 F: 203.789.6142 www.langan.com

Project
NORTH BLOOMFIELD COMMERCE CENTER
116 WEST DUDLEY TOWN ROAD
MAP 16, LOT 43
BLOOMFIELD CONNECTICUT

APPLICANT/DEVELOPER:
NORTHPOINT DEVELOPMENT
3315 NORTH OAK TRAFFICWAY
KANSAS CITY, MO 64116

SUBMISSION PURPOSE: INLAND WETLANDS AND WATERCOURSES COMMISSION PERMIT APPLICATION

Drawing Title
UTILITY PLAN I

Project No.	Drawing No.
140255601	CU101
Date: 12/08/2022	
Drawn By: ALF	
Checked By: DTG	

LANGAN

Project No. 140255601

© 2022 Langan

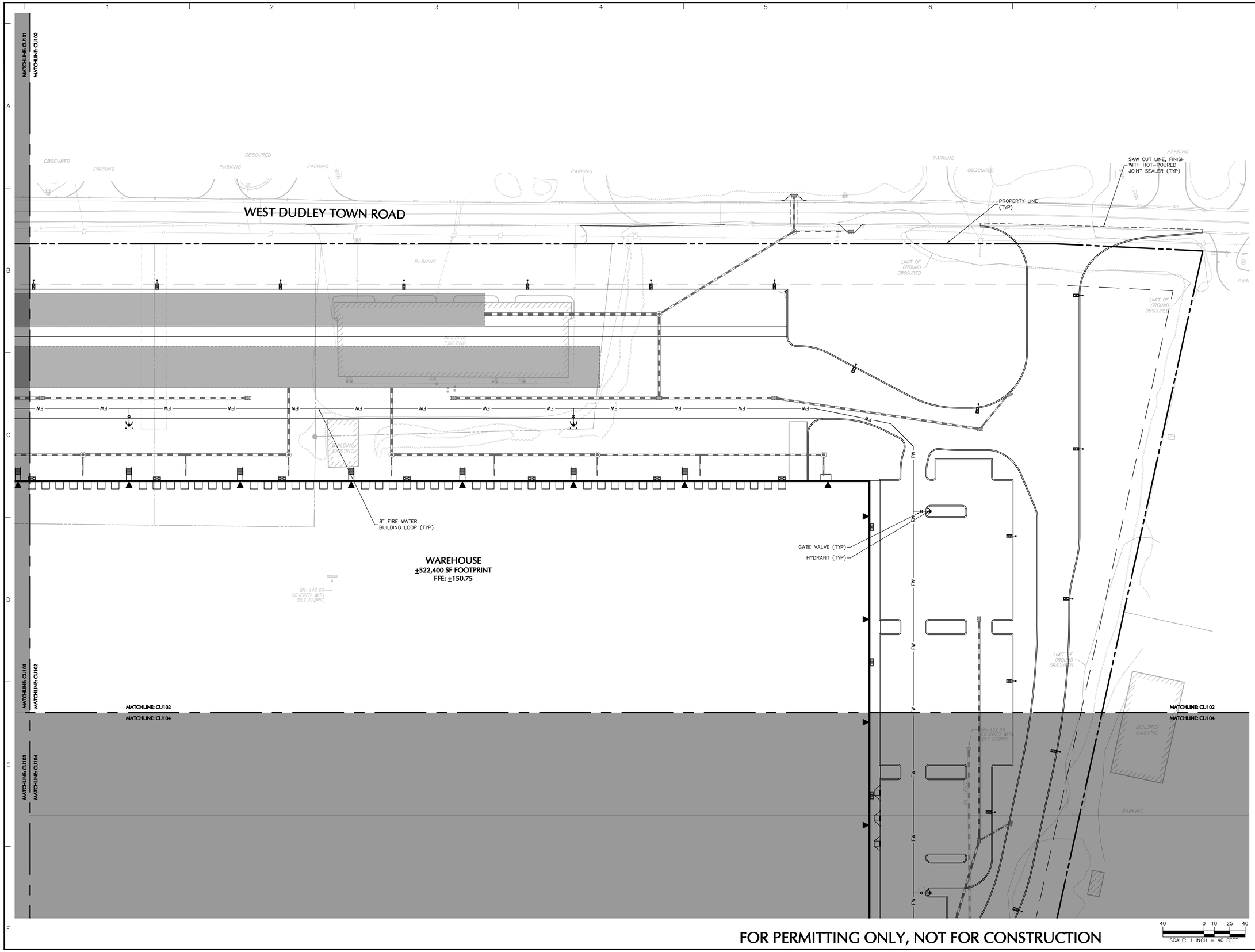

SHEET LEGEND

1" = 1,000'

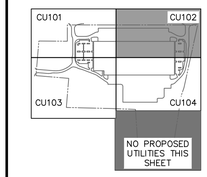

Date	Description	No.

Revisions

STATE OF CONNECTICUT
TIMOTHY S. OSBORNE
No. 25400
LICENSED
PROFESSIONAL ENGINEER

LANGAN

Langan Engineering and Environmental Services, Inc.

555 Long Wharf Drive
New Haven, CT 06511

T: 203.562.5771 F: 203.789.6142 www.langan.com

Project

NORTH BLOOMFIELD COMMERCE CENTER

116 WEST DUDLEY TOWN ROAD
MAP 16, LOT 43

BLOOMFIELD CONNECTICUT

APPLICANT/DEVELOPER:
NORTHPOINT DEVELOPMENT
3315 NORTH OAK TRAFFICWAY
KANSAS CITY, MO 64116

SUBMISSION PURPOSE: INLAND WETLANDS AND WATERCOURSES COMMISSION PERMIT APPLICATION

Drawing Title

UTILITY PLAN II

Project No.	Drawing No.
140255601	CU102
Date: 12/08/2022	
Drawn By: ALF	
Checked By: DTG	

FOR PERMITTING ONLY, NOT FOR CONSTRUCTION

LANGAN

Project No. 140255601

© 2022 Langan

MATCHLINE: CU101
MATCHLINE: CU103

WEST DUDLEY TOWN ROAD

194 LF 4" PVC @ 1.00%
194 LF 4" PVC @ 1.00%
206 LF 8" PVC @ 1.11%
123 LF 8" PVC @ 1.00%
107 LF 8" PVC @ 1.00%
328 LF 8" PVC @ 1.90%
99 LF 8" PVC @ 1.00%

FORMER APPLICATION STORMWATER MANAGEMENT FEATURE TO BE MODIFIED. REFER TO CG SERIES

4" DOMESTIC WATER LINE TO BUILDING (TYP)

SMH-3
RIM: 140.57
INV. IN (8" NE): 136.38
INV. IN (4" W): 137.95
INV. OUT: 136.28

TELECOM SERVICE LINE (TYP)

ELECTRICAL SERVICE LINE (TYP)

8" FIRE WATER BUILDING LOOP (TYP)

HYDRANT (TYP)

GATE VALVE (TYP)

STRU-38
INV. OUT: 139.75

WAREHOUSE
±522,400 SF FOOTPRINT
FFE: ±150.75

GAS METER

UTILITY ROOM

TRANSFORMER

SMH-2
RIM: 139.74
INV. IN (8" N): 135.05
INV. OUT: 134.95

SMH-1
RIM: 138.65
INV. IN (8" N): 133.88
INV. OUT: 133.78

ELECTRICAL STRUCTURE (TYP)

SMH-4
RIM: 146.99
INV. IN (8" N): 138.76
INV. OUT: 138.66

CONNECT TO EXISTING 12" SANITARY LINE. COORDINATE WITH UTILITY PROVIDER
INV. IN (8" N): 127.56

SAW CUT LINE, FINISH WITH HOT-POURED JOINT SEALER (TYP)

UTILITY POLE TO REMAIN

CONNECT TO EXISTING UTILITY POLE. COORDINATE WITH UTILITY PROVIDER

PROPERTY LINE (TYP)

100' WETLAND UPLAND REVIEW AREA (TYP)

FORMER APPLICATION STORMWATER MANAGEMENT FEATURE TO BE MODIFIED. REFER TO CG SERIES

50' WETLAND VEGETATED BUFFER (TYP)

WETLAND LIMITS (TYP)

BUILDING EXISTING

LIMIT OF GROUND OBSCURED

OBSCURED

15" HDPE
INV=130.62

SCALE: 1 INCH = 40 FEET

FOR PERMITTING ONLY, NOT FOR CONSTRUCTION

CT NAD 83

SHEET LEGEND
1" = 1,000'

CU101 CU102 CU103 CU104
NO PROPOSED UTILITIES THIS SHEET

Date	Description	No.

Revisions

STATE OF CONNECTICUT
DOUGLAS T. GOLDEN
No. 25,[illegible]
LICENSED PROFESSIONAL ENGINEER

LANGAN
Langan Engineering and Environmental Services, Inc.
555 Long Wharf Drive
New Haven, CT 06511
T: 203.562.5771 F: 203.789.6142 www.langan.com

Project
NORTH BLOOMFIELD COMMERCE CENTER
116 WEST DUDLEY TOWN ROAD
MAP 16, LOT 43
BLOOMFIELD CONNECTICUT

APPLICANT/DEVELOPER:
NORTHPOINT DEVELOPMENT
3315 NORTH OAK TRAFFICWAY
KANSAS CITY, MO 64116

SUBMISSION PURPOSE: INLAND WETLANDS AND WATERCOURSES COMMISSION PERMIT APPLICATION

Drawing Title
UTILITY PLAN III

Project No. 140255601
Date 12/08/2022
Drawn By ALF
Checked By DTG
Drawing No. CU103

LANGAN
Project No. 140255601

© 2022 Langan

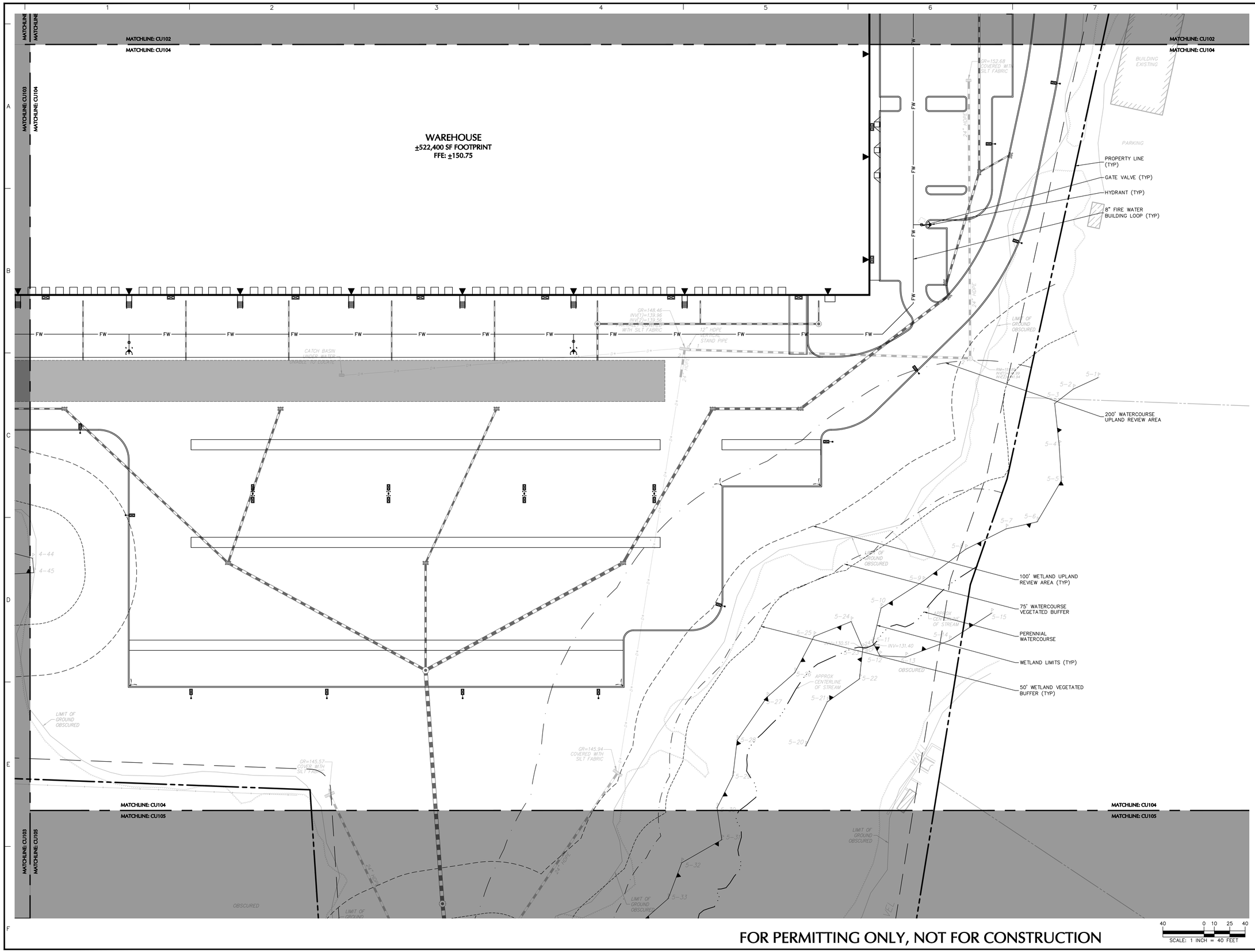

SHEET LEGEND

1" = 1,000'

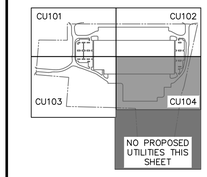

Date	Description	No.
Revisions		

LANGAN
Langan Engineering and Environmental Services, Inc.
555 Long Wharf Drive
New Haven, CT 06511
T: 203.562.5771 F: 203.789.6142 www.langan.com

Project
NORTH BLOOMFIELD COMMERCE CENTER
116 WEST DUDLEY TOWN ROAD
MAP 16, LOT 43
BLOOMFIELD CONNECTICUT

APPLICANT/DEVELOPER:
NORTHPOINT DEVELOPMENT
3315 NORTH OAK TRAFFICWAY
KANSAS CITY, MO 64116

SUBMISSION PURPOSE: INLAND WETLANDS AND WATERCOURSES COMMISSION PERMIT APPLICATION

Drawing Title
UTILITY PLAN IV

Project No.	Drawing No.
140255601	CU104
Date 12/08/2022	
Drawn By ALF	
Checked By DTG	

FOR PERMITTING ONLY, NOT FOR CONSTRUCTION

SCALE: 1 INCH = 40 FEET

Project No. 140255601

© 2022 Langan

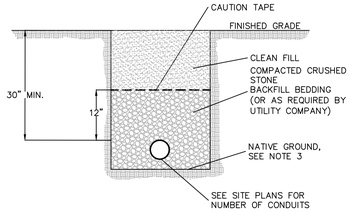

NOTES:
1. TRENCHES IN STABLE SOIL OVER 5 FT DEEP SHALL BE REINFORCED BY APPROVED OSHA METHODS.
2. TRENCHES SHALL BE COMPACTED.
3. IF NATIVE GROUND IS NOT SUITABLE, THE CONTRACTOR SHALL EXCAVATE TO AN ACCEPTABLE DEPTH AND INSTALL MATERIALS AS APPROVED BY ENGINEERS AND UTILITY COMPANY.

1 TELEPHONE TRENCH DETAIL
N.T.S.

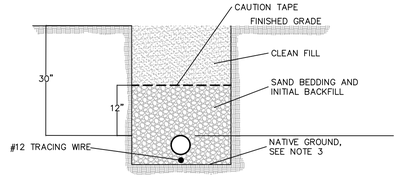

NOTES:
1. TRENCHES IN STABLE SOIL OVER 5 FT DEEP SHALL BE REINFORCED BY APPROVED OSHA METHODS
2. TRENCHES SHALL BE COMPACTED
3. IF NATIVE GROUND IS NOT SUITABLE, THE CONTRACTOR SHALL EXCAVATE TO AN ACCEPTABLE DEPTH AND INSTALL MATERIALS AS APPROVED BY ENGINEERS AND UTILITY COMPANY. CONTRACTOR TO PROVIDE EXCAVATION, BEDDING, SAND BACKFILL AND FIND BACKFILL. GAS COMPANY TO PROVIDE INSTALLATION OF ALL GAS PIPING AND SERVICES.

2 GAS MAIN TRENCH DETAIL
N.T.S.

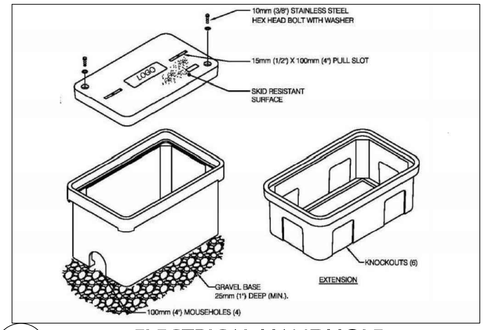

3 ELECTRICAL HANDHOLE
N.T.S

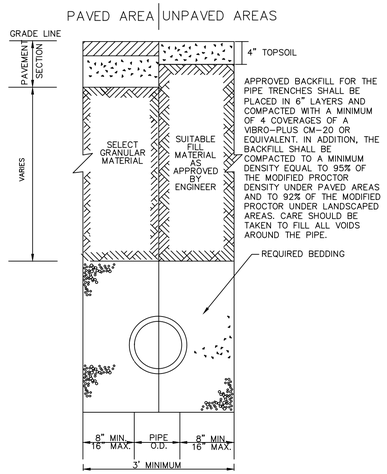

4 UTILITY PIPE BACKFILL
N.T.S.

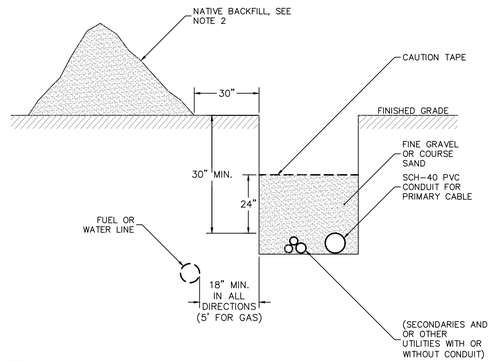

NOTES:
1. ALL DIRECT-BURIED CABLES SHALL BE INSTALLED AT A DEPTH OF AT LEAST 30 INCHES IN THE FOLLOWING ORDER:
   A. ENSURE THAT THE BOTTOM OF THE TRENCH IS WELL-TAMPED AND FREE OF ROCKS.
   B. INSTALL THE CONDUIT, GLUING ALL COUPLINGS.
   C. INSTALL SECONDARIES AND OTHER UTILITY CABLES OR CONDUITS LARGER THAN 2 INCHES IN MAXIMUM DIAMETER.
   D. BACKFILL WITH 12 INCHES CLEAN FILL NOT TO CONTAIN STONES LARGER THAN 2 INCHES IN MAXIMUM DIAMETER.
   E. INSTALL CABLE WARNING TAPE 12 INCHES OVER THE CONDUIT.
   F. FILL IN THE REMAINDER OF THE TRENCH WITH NATIVE BACKFILL.
2. THE TRENCH SHALL BE BACKFILLED IMMEDIATELY FOLLOWING PLACEMENT OF THE CONDUIT.
3. 1/4-INCH NYLON ROPE AND PLASTIC CONDUIT PLUG TO BE SUPPLIED AND INSTALLED BY CONTRACTOR.

5 ELECTRICAL UTILITY TRENCH
N.T.S.

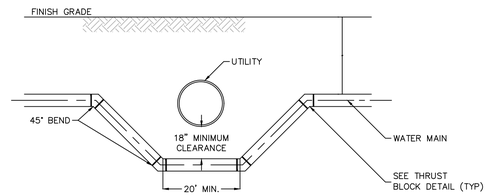

NOTES:
WATER MAIN SHALL BE CONSTRUCTED OF CEMENT LINED CLASS 52 DUCTILE IRON PIPE OR BETTER. ONE FULL LENGTH OF WATER MAIN SHOULD BE CENTERED UNDER THE CROSS PIPE SO THAT BOTH JOINTS WILL BE AS FAR FROM THE CROSSING AS POSSIBLE.

6 WATER MAIN DROP
N.T.S.

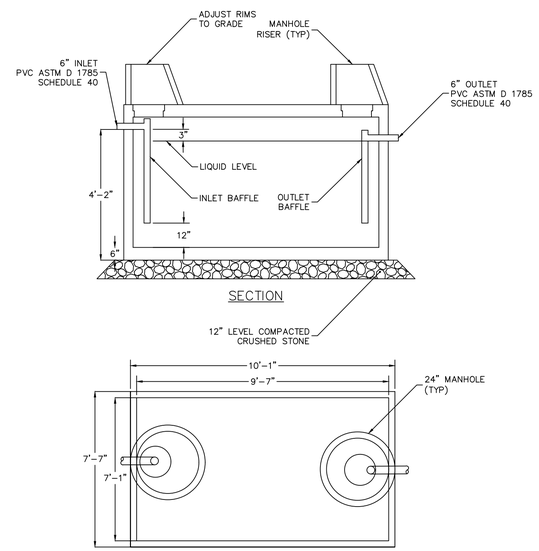

NOTES:
1. CONCRETE MINIMUM STRENGTH – 5,000 PSI AT 28 DAYS.
2. STEEL REINFORCEMENT – ASTM A-615 GR.60, A-185, OR A-497, 1" MIN COVER
3. CONSTRUCTION JOINT SEALED WITH BUTYL SEALANT.
4. DESIGN LOADING – AASHTO HS20 – 44.
5. ALL TEES SHALL BE PVC AND FASTENED WITH STAINLESS STEEL HARDWARE.
6. MANHOLE COVERS SHALL BE PLACATED WITH NOTIFICATION AS TO THE DANGER OF ENTERING THE STRUCTURE DUE TO NOXIOUS GASES.
7. MANHOLE COVERS SHALL EITHER WEIGH A MINIMUM OF 59 POUNDS OR CONTAIN A LOCKING MECHANISM TO PREVENT UNAUTHORIZED ENTRANCE.
8. OUTER DIMENSIONS SHOWN ARE APPROXIMATE SIZES. CONTRACTOR TO SUBMIT SHOP DRAWINGS FOR REVIEW BY ENGINEER.

9 OIL WATER SEPARATOR (FOR REFERENCE ONLY)
N.T.S.

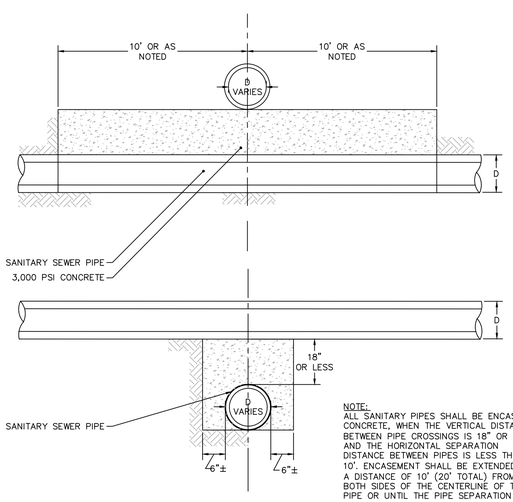

NOTE:
ALL SANITARY PIPES SHALL BE ENCASED IN CONCRETE, WHEN THE VERTICAL DISTANCE BETWEEN PIPE CROSSINGS IS 18" OR LESS AND THE HORIZONTAL SEPARATION DISTANCE BETWEEN PIPES IS LESS THEN 10'. ENCASEMENT SHALL BE EXTENDED FOR A DISTANCE OF 10' (20' TOTAL) FROM BOTH SIDES OF THE CENTERLINE OF THE PIPE OR UNTIL THE PIPE SEPARATION IS 10' HORIZONTAL, WHICH EVER IS LONGER.

7 CONCRETE ENCASEMENT FOR SANITARY SEWER
N.T.S.

NOTES:
1. ROOF LOAD DESIGN OF 4000 LBS SPREAD OVER 1-FOOT-SQUARE AREA ANYWHERE ON ROOF
2. WALLS SHALL RESIST A SOIL PRESSURE OF EQUIVALENT FLUID PRESSURE OF 33 PCF. SURCHARGE OF 2.5 FEET OF SOIL WEIGHING 120 PCF.
3. CONCRETE SHALL BE 4000 PSI AT 28 DAYS. ENTRAINED AIR 6-9%
4. STEEL SHALL BE ASTM A615-1992, GRADE 40.
5. ALL CONCRETE AND REINFORCEMENT IN ACCORDANCE WITH ACI 318-1999.
6. FOR LIFTING TOP OR BOTTOM SECTION, CAST IN FOUR 3/4-INCH-DIAMETER DAYTON SUREGRIP (OR APPROVED EQUAL) COIL LOOP INSERTS, GALVANIZED, WITH T21 PLASTIC SETTING PLUGS. INSERTS ARE TO BE SECURED IN PLACE WITH REBAR.
   TOP: CATALOG TYPE B16, 3/4-INCH-DIAMETER X 4 INCHES LONG.
   BOTTOM: CATALOG TYPE B16, 3/4-INCH-DIAMETER X 4 INCHES LONG.
7. PROVIDE 3-INCH-LONG GROOVE (3/4 INCH X 1 INCH) FOR LIFTING SLING AT EACH CORNER, EACH SIDE.
8. MANUFACTURE'S IDENTIFICATION AND MONTH/YEAR WHEN MANUFACTURED SHALL BE LEGIBLY MARKED IN/ON CONCRETE IN THE SIDE.
9. ZINC ALLOY INSERTS 3/4 INCH – 10 INCHES X 3 INCHES FOR CABLE PULLING. TO BE LOCATED 4 INCHES ABOVE (7 INCH X 13 INCH) KNOCKOUTS FOUR).

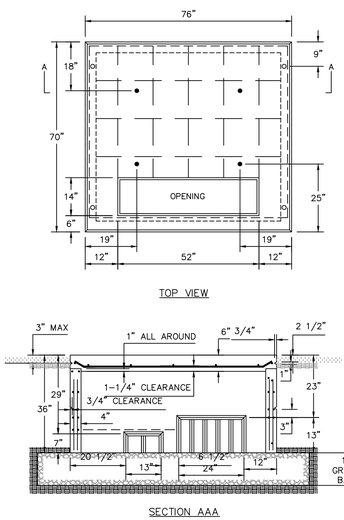

8 PRECAST TRANSFORMER PAD
N.T.S.

FOR PERMITTING ONLY, NOT FOR CONSTRUCTION

Date	Description	No.

Revisions

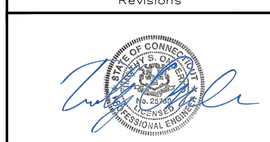

LANGAN
Langan Engineering and Environmental Services, Inc.
555 Long Wharf Drive
New Haven, CT 06511
T: 203.562.5771 F: 203.789.6142 www.langan.com

Project
NORTH BLOOMFIELD COMMERCE CENTER
116 WEST DUDLEY TOWN ROAD
MAP 16, LOT 43
BLOOMFIELD CONNECTICUT

APPLICANT/DEVELOPER:
NORTHPOINT DEVELOPMENT
3315 NORTH OAK TRAFFICWAY
KANSAS CITY, MO 64116

SUBMISSION PURPOSE: INLAND WETLANDS AND WATERCOURSES COMMISSION PERMIT APPLICATION

Drawing Title
UTILITY DETAILS I

Project No. 140255601
Date 12/08/2022
Drawn By JMGM
Checked By TSO
Drawing No. CU501

LANGAN
Project No. 140255601

© 2022 Langan

THE METROPOLITAN DISTRICT
SEWER STANDARD DETAILS

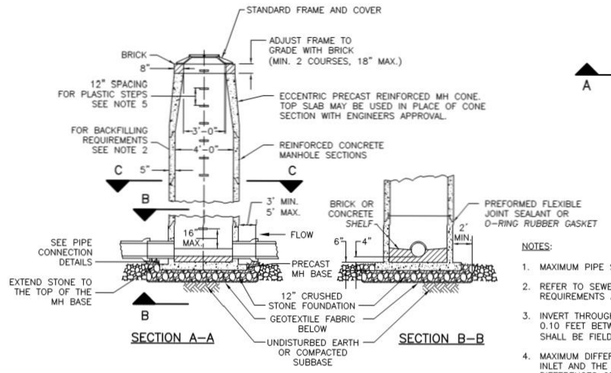

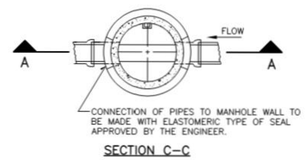

NOTES:

1. MAXIMUM PIPE SIZE TO BE INSTALLED IN 48" MANHOLE BASE SHALL BE 18".
2. REFER TO SEWER TRENCH DETAIL FOR BACKFILLING AND COMPACTION REQUIREMENTS AROUND SEWER MANHOLES.
3. INVERT THROUGH THE MANHOLE SHALL HAVE A UNIFORM GRADE OF MINIMUM 0.10 FEET BETWEEN THE INVERTS OF THE INLET AND OUTLET PIPES. INVERTS SHALL BE FIELD FORMED AND NOT FORMED IN SHOP/YARD.
4. MAXIMUM DIFFERENCE IN ELEVATION BETWEEN THE INVERT OF THE TRIBUTARY INLET AND THE MANHOLE INVERT SHALL BE 18 INCHES. ELEVATION DIFFERENCES GREATER THAN 18 INCHES WILL REQUIRE A DROP CONNECTION.
5. DISTANCE FROM TOP OF MANHOLE COVER TO FIRST PLASTIC STEP SHALL BE BETWEEN 12" AND 16".

TYPE II PRECAST CONCRETE MANHOLE

DETAIL S / 18
NTS

File: S-18 Type II Precast Concrete Manhole.dwg — PAGE 18 — Latest Revision: JANUARY 2017

THE METROPOLITAN DISTRICT
SEWER STANDARD DETAILS

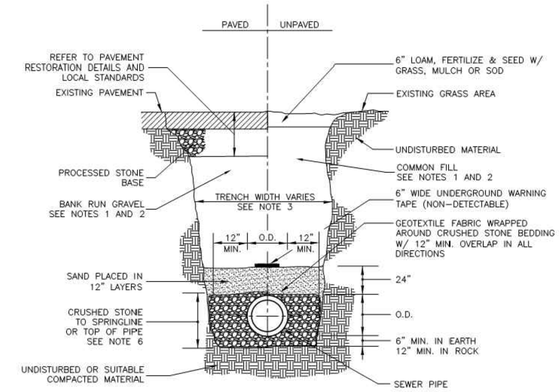

NOTES:

1. ALL EXCAVATED MATERIAL SHALL BE REMOVED FROM THE SITE AND DISPOSED.
2. BACKFILL MATERIAL SHALL BE APPROVED BANK RUN GRAVEL IN PAVED AREAS (INCLUDING DRIVEWAYS AND SIDEWALKS) OR COMMON FILL IN UNPAVED AREAS.
3. TRENCH WIDTH VARIES BASED ON PIPE SIZE AND DEPTH.
4. TRENCHES LOCATED IN THE ROAD SHOULDER SHALL BE TREATED THE SAME AS TRENCHES IN THE PAVED ROADWAY EXCEPT FOR PAVEMENT AND SURFACE RESTORATION WORK.
5. PROVIDE IMPERVIOUS TRENCH DAM(S) IN STONE BEDDING AS DIRECTED BY THE ENGINEER. SEE PIPE TRENCH DAM DETAIL.
6. CRUSHED STONE SHALL BE INSTALLED TO TOP OF PIPE FOR PVC AND DI PIPE AND TO SPRINGLINE FOR RC PIPE.

SEWER TRENCH

DETAIL S / 2
NTS

File: S-2 Sewer Trench.dwg — PAGE 2 — Latest Revision: JANUARY 2017

THE METROPOLITAN DISTRICT
SEWER STANDARD DETAILS

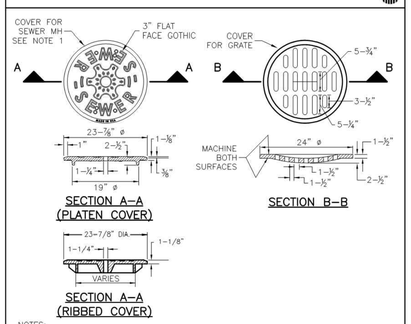

NOTES:

1. MANHOLES COVERS MAY BE DESIGN WITH OR WITHOUT RIBS. THE TOP SURFACE OF THE MANHOLE COVER SHALL BE FLAT. THE BOTTOM SURFACE MAY OR MAY NOT BE FLAT.
2. PROVIDE ALTERNATIVE INSCRIPTION 'STORM DRAIN' WHEN SPECIFIED.
3. THE LOWER SURFACE OF THE COVER AND THE CORRESPONDING UPPER SURFACE OF THE FRAME SHALL BE MACHINE FINISHED TO PROVIDE A SMOOTH FLAT CONTACT OR FIT WITHOUT ANY TENDENCY FOR THE COVER OR GRATE TO ROCK OR RATTLE. THE GAP BETWEEN THE COVER/GRATE AND FRAME SHALL BE NO MORE THAN ⅛" ALL AROUND.

STANDARD MANHOLE COVERS

DETAIL S / 27
NTS

PAGE 27 — File: S-27 Standard Manhole Covers.dwg — Latest Revision: JANUARY 2017

THE METROPOLITAN DISTRICT
SEWER STANDARD DETAILS

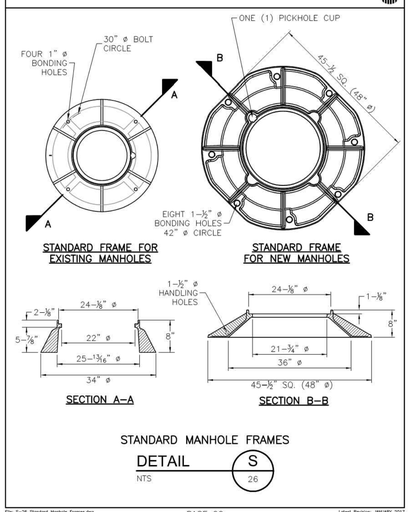

STANDARD MANHOLE FRAMES

DETAIL S / 26
NTS

PAGE 26 — File: S-26 Standard Manhole Frames.dwg — Latest Revision: JANUARY 2017

THE METROPOLITAN DISTRICT
SEWER STANDARD DETAILS

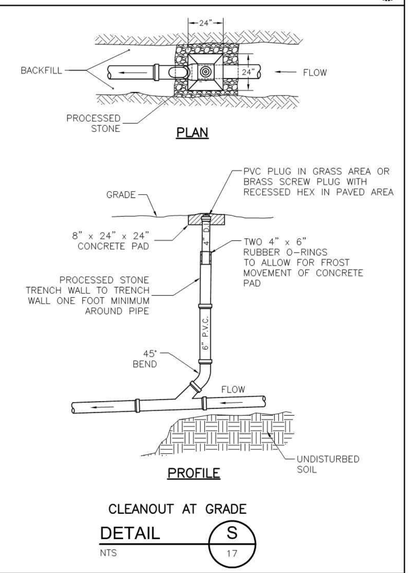

CLEANOUT AT GRADE

DETAIL S / 17
NTS

PAGE 17 — File: S-17 Cleanout at Grade.dwg — Latest Revision: JANUARY 2017

THE METROPOLITAN DISTRICT
WATER STANDARD DETAILS

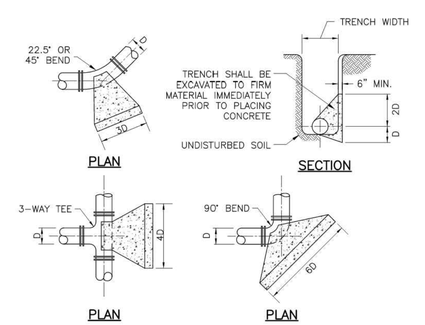

NOTES:

1. THRUST RESTRAINTS SHALL BE EITHER RESTRAINED JOINTS FOR DUCTILE IRON PIPE OR THRUST BLOCKS. THRUST BLOCKS ARE NOT THE PREFERRED METHOD OF THRUST RESTRAINT AND WILL ONLY BE PERMITTED IN SPECIAL CASES AS DIRECTED BY THE ENGINEER OR BY THE DISTRICT.
2. THRUST BLOCKS SHOULD ONLY BE USED WHEN SOIL CONDITIONS ARE STABLE.
3. ANCHORS SHALL BE BASED ON MAXIMUM ALLOWABLE WATER PRESSURE OF 150 PSI.

CONCRETE THRUST BLOCKS FOR 12–INCH AND SMALLER MAINS

DETAIL W / 27
NTS

PAGE 75 — File: W-27 Concrete Thrust Blocks for 12-Inch and Smaller Mains.dwg — Latest Revision: JANUARY 2017

6 SEWER MANHOLE COVER & FRAME
SOURCE: THE METROPOLITAN DISTRICT (MDC)

FOR PERMITTING ONLY, NOT FOR CONSTRUCTION

Date	Description	No.
Revisions		

LANGAN
Langan Engineering and Environmental Services, Inc.
555 Long Wharf Drive
New Haven, CT 06511
T: 203.562.5771 F: 203.789.6142 www.langan.com

Project
NORTH BLOOMFIELD COMMERCE CENTER
116 WEST DUDLEY TOWN ROAD
MAP 16, LOT 43
BLOOMFIELD CONNECTICUT

APPLICANT/DEVELOPER:
NORTHPOINT DEVELOPMENT
3315 NORTH OAK TRAFFICWAY
KANSAS CITY, MO 64116

SUBMISSION PURPOSE: INLAND WETLANDS AND WATERCOURSES COMMISSION PERMIT APPLICATION

Drawing Title
UTILITY DETAILS II

Project No. 140255601
Date 12/08/2022
Drawn By JMGM
Checked By TSO
Drawing No. CU502

© 2022 Langan

Project No. 140255601

Date: 12/7/2022 Time: 19:56 User: afedus Style Table: Langan.stb Layout: CU502 Document Code: 140255601-0501-CU501-0102

THE METROPOLITAN DISTRICT
WATER STANDARD DETAILS

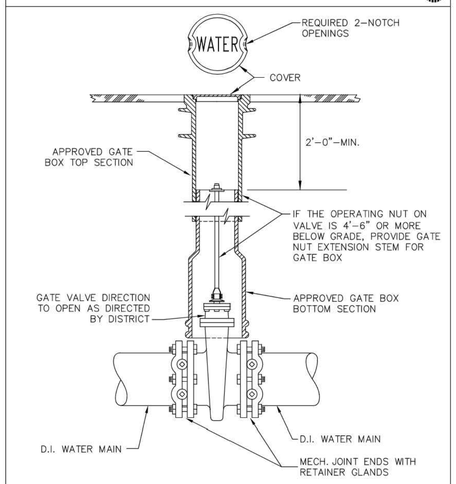

STANDARD GATE VALVE 12-INCH AND SMALLER

DETAIL W 12
NTS

File: W-12 Standard Gate Valve 12-inch and Smaller revised 2-7-18.dwg — PAGE 60 — Latest Revision: February 2018

THE METROPOLITAN DISTRICT
WATER STANDARD DETAILS

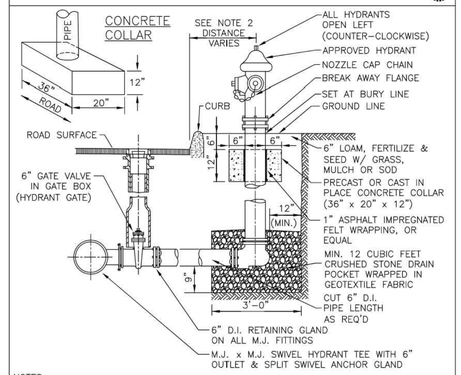

NOTES:

1. INSTALL 6" WIDE UNDERGROUND WARNING TAPE (NON-DETECTABLE) 2-FT ABOVE LENGTH OF HYDRANT BRANCH.
2. DISTANCE SHALL BE 3'± IN BLOOMFIELD, FARMINGTON AND GLASTONBURY AND 2'± IN OTHER MEMBER TOWNS.
3. OFFSET HYDRANT LATERAL AS NECESSARY WHILE MAINTAINING MINIMUM 4.5 FEET OF COVER TO SET FIRE HYDRANT BURY LINE AT GRADE. FURNISH AND INSTALL EXTENSIONS AS NECESSARY ONLY IF A LATERAL OFFSET IS NOT POSSIBLE.

STANDARD FIRE HYDRANT ASSEMBLY

DETAIL W 22
NTS

File: W-22 Standard Fire Hydrant Assembly revised 2-7-2018.dwg — PAGE 70 — Latest Revision: February 2018

THE METROPOLITAN DISTRICT
WATER STANDARD DETAILS

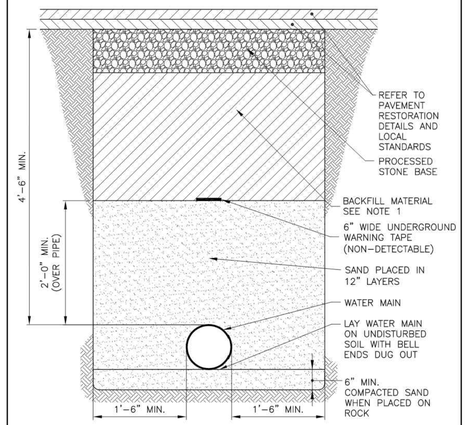

NOTE:

1. BACKFILL MATERIAL SHALL BE BANK-RUN GRAVEL IN PAVED AREAS (INCLUDING SIDEWALKS AND DRIVEWAYS) OR COMMON FILL IN NON-PAVED AREAS.

WATER MAIN TRENCH

DETAIL W 3
NTS

FILE: W-3 Water Main Trench.dwg — PAGE 51 — Latest Revision: JANUARY 2017

THE METROPOLITAN DISTRICT
WATER STANDARD DETAILS

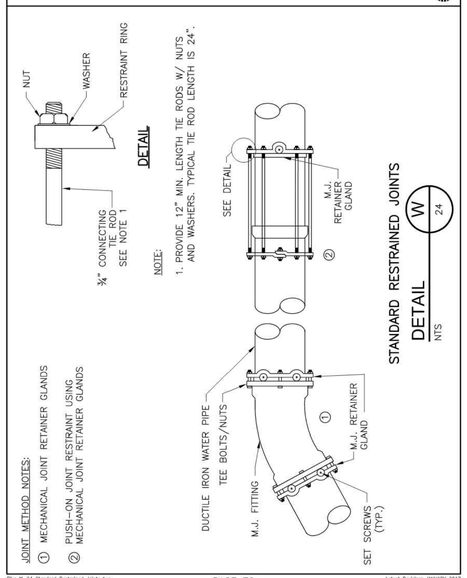

NOTE:

1. PROVIDE 12" MIN. LENGTH TIE RODS W/ NUTS AND WASHERS. TYPICAL TIE ROD LENGTH IS 24".

JOINT METHOD NOTES:

① MECHANICAL JOINT RETAINER GLANDS
② PUSH-ON JOINT RESTRAINT USING MECHANICAL JOINT RETAINER GLANDS

STANDARD RESTRAINED JOINTS

DETAIL W 24
NTS

File: W-24 Standard Restrained Joints.dwg — PAGE 72 — Latest Revision: JANUARY 2017

THE METROPOLITAN DISTRICT
WATER STANDARD DETAILS

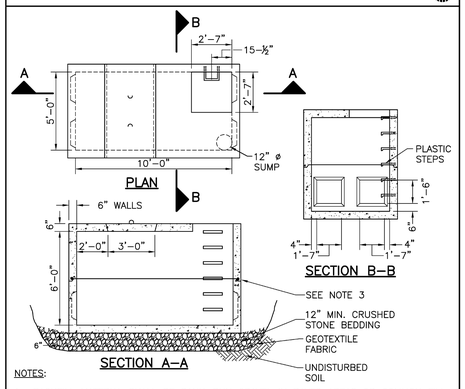

NOTES:

1. BACKFILL MATERIAL SHALL BE BANK-RUN GRAVEL IN PAVED AREAS OR COMMON FILL IN UNPAVED AREAS.
2. CONCRETE STRENGTH SHALL BE MIN. 4,000 P.S.I (28 DAYS). REINFORCING STEEL NOT SHOWN.
3. INSTALL REINFORCED CONCRETE MANHOLE SECTIONS WITH PREFORMED FLEXIBLE JOINT SEALANT OR O-RING RUBBER GASKET.

5' x 10' x 6' PRECAST METER PIT FOR 4-INCH AND LARGER METERS

DETAIL W 33
NTS

File: W-33 5'x10'x6' Precast Meter Pit For 4-inch and Larger Meters.dwg — PAGE 81 — Latest Revision: JANUARY 2017

THE METROPOLITAN DISTRICT
WATER STANDARD DETAILS

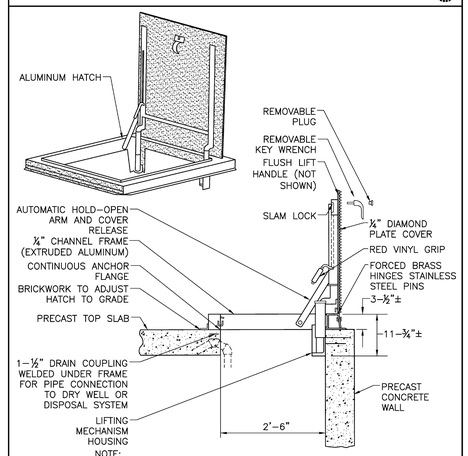

NOTE:

1. ALUMINUM HATCH SHALL BE 2'-6" x 2'-6" BILCO TYPE "J-ALH20" OR EQUAL.

ALUMINUM HATCH FOR PRECAST METER PITS

DETAIL W 35
NTS

File: W-35 Aluminum Hatch for Precast Meter Pits.dwg — PAGE 83 — Latest Revision: JANUARY 2017

Date	Description	No.

Revisions

STATE OF CONNECTICUT · TIMOTHY S. ORGERY · No. 23,800 · LICENSED PROFESSIONAL ENGINEER

LANGAN
Langan Engineering and Environmental Services, Inc.
555 Long Wharf Drive
New Haven, CT 06511
T: 203.562.5771 F: 203.789.6142 www.langan.com

Project
NORTH BLOOMFIELD COMMERCE CENTER
116 WEST DUDLEY TOWN ROAD
MAP 16, LOT 43
BLOOMFIELD CONNECTICUT

APPLICANT/DEVELOPER:
NORTHPOINT DEVELOPMENT
3315 NORTH OAK TRAFFICWAY
KANSAS CITY, MO 64116

SUBMISSION PURPOSE: INLAND WETLANDS AND WATERCOURSES COMMISSION PERMIT APPLICATION

Drawing Title
UTILITY DETAILS III

Project No. 140255601
Date 12/08/2022
Drawn By JMGM
Checked By TSO
Drawing No. CU503

FOR PERMITTING ONLY, NOT FOR CONSTRUCTION

LANGAN
Project No. 140255601

© 2022 Langan

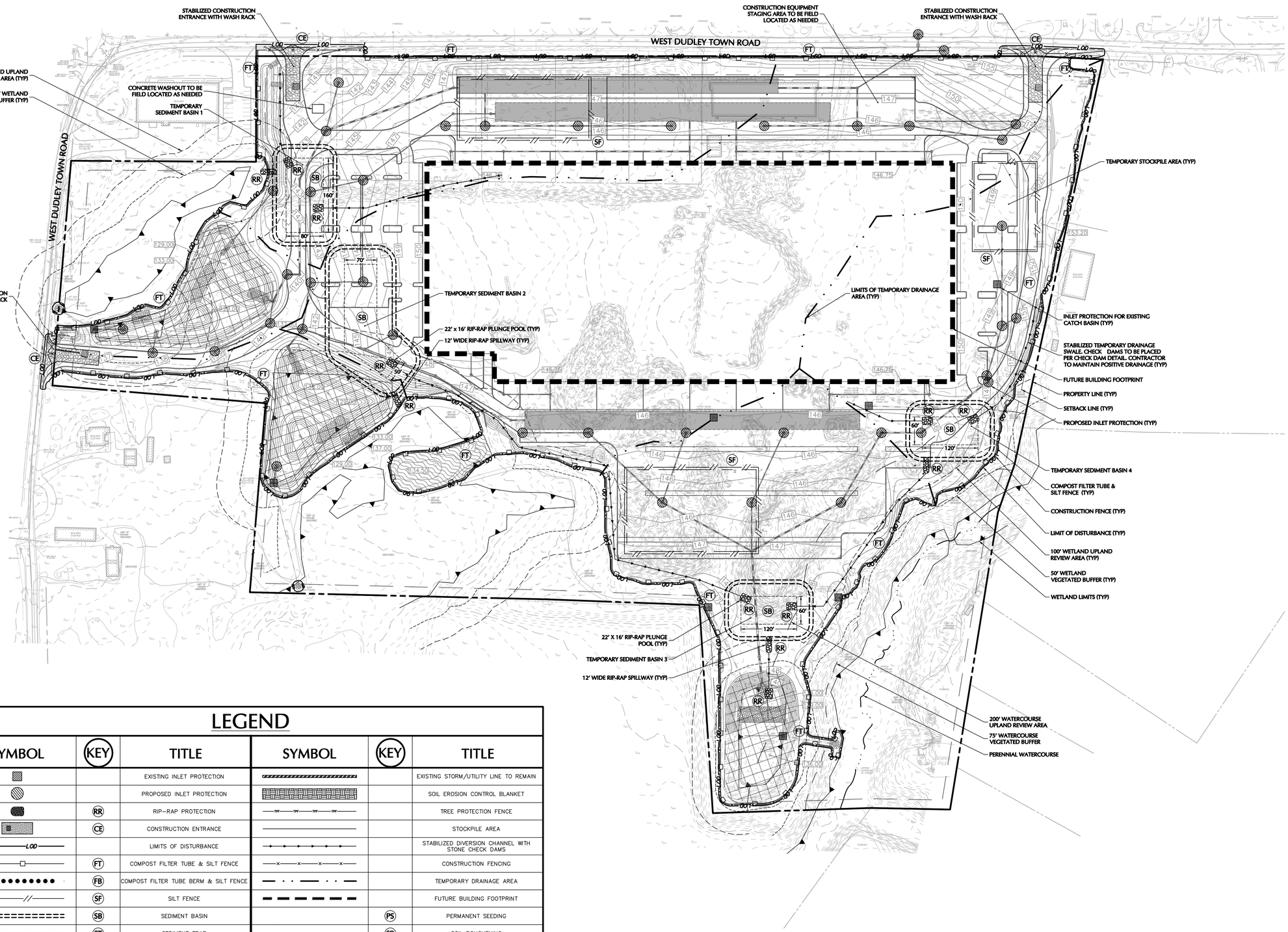

LEGEND

SYMBOL	KEY	TITLE	SYMBOL	KEY	TITLE
		EXISTING INLET PROTECTION			EXISTING STORM/UTILITY LINE TO REMAIN
		PROPOSED INLET PROTECTION			SOIL EROSION CONTROL BLANKET
	RR	RIP-RAP PROTECTION	—TPF—TPF—TPF—TPF—		TREE PROTECTION FENCE
	CE	CONSTRUCTION ENTRANCE			STOCKPILE AREA
—LOD—LOD—		LIMITS OF DISTURBANCE			STABILIZED DIVERSION CHANNEL WITH STONE CHECK DAMS
	FT	COMPOST FILTER TUBE & SILT FENCE	—x—x—x—x—		CONSTRUCTION FENCING
	FB	COMPOST FILTER TUBE BERM & SILT FENCE			TEMPORARY DRAINAGE AREA
	SF	SILT FENCE			FUTURE BUILDING FOOTPRINT
	SB	SEDIMENT BASIN		PS	PERMANENT SEEDING
	ST	SEDIMENT TRAP		SR	SOIL ROUGHENING
		INFILTRATION BASIN PROTECTION AREA			CONCRETE WASHOUT

FOR PERMITTING ONLY, NOT FOR CONSTRUCTION

100 0 50 100
SCALE IN FEET

Date	Description	No.
Revisions		

STATE OF CONNECTICUT
TIMOTHY S. OSBORN
No. 23480
LICENSED PROFESSIONAL ENGINEER

LANGAN
Langan Engineering and Environmental Services, Inc.
555 Long Wharf Drive
New Haven, CT 06511
T: 203.562.5771 F: 203.789.6142 www.langan.com

Project
NORTH BLOOMFIELD COMMERCE CENTER
116 WEST DUDLEY TOWN ROAD
MAP 16, LOT 43
BLOOMFIELD CONNECTICUT

APPLICANT/DEVELOPER:
NORTHPOINT DEVELOPMENT
3315 NORTH OAK TRAFFICWAY
KANSAS CITY, MO 64116

SUBMISSION PURPOSE: INLAND WETLANDS AND WATERCOURSES COMMISSION PERMIT APPLICATION

Drawing Title
OVERALL SOIL EROSION & SEDIMENT CONTROL PLAN

Project No. 140255601
Date 12/08/2022
Drawn By JMGM
Checked By TSO
Drawing No. CE100

Project No. 140255601

© 2022 Langan

CONSTRUCTION SEQUENCE

PHASE I

1. NOTIFY ALL APPROPRIATE CITY DEPARTMENTS PRIOR TO CONSTRUCTION COMMENCEMENT IN ACCORDANCE WITH ALL APPROVALS

2. ESTABLISH CONSTRUCTION ACCESS TO PORTION OF PROPERTY TO BE DEVELOPED

3. PLACE CRUSHED STONE STABILIZED CONSTRUCTION ENTRANCE AND SET UP CONSTRUCTION TRAILERS

4. INSTALL SILT FENCE AND APPROPRIATE INLET PROTECTION

5. REMOVE ALL SURFICIAL FEATURES PER SITE PLAN

6. BEGIN EXCAVATION OF TEMPORARY SEDIMENT TRAPS TO ESTABLISH STORMWATER RUNOFF CONTROL MEASURES

PHASE II

1. BEGIN EXCAVATION, PARKING GARAGE AND BUILDING FOUNDATION WORK

2. BEGIN SITE PREPARATION/ROUGH GRADE FOR LOADING AREAS AND PARKING LOTS

3. BEGIN UTILITIES AND STORMWATER TRENCHING/INSTALLATION, ENSURE ROOF NETWORK IS INSTALLED PRIOR TO BEGINNING ROOF CONSTRUCTION

4. CLEAR, GRUB, STRIP AND STOCKPILE TOPSOIL FROM REMAINING CONSTRUCTION AREA

5. EXCAVATE SITE CUTS AND PLACE COMPACTED FILLS IN ACCORDANCE WITH THE GRADING PLAN. INSTALL PROPOSED DRAINAGE SYSTEM AS REQUIRED.

6. INSTALL UTILITIES WHERE SHOWN AND WHERE TEMPORARILY NECESSARY

7. PLACE TOPSOIL ON COMPLETED EMBANKMENTS, SEED AND STABILIZE

PHASE III

1. COMPLETE UNDERGROUND UTILITY CONSTRUCTION

2. COMPLETE FINAL GRADING

3. INSTALL BITUMINOUS CONCRETE BASE COURSE

4. INSTALL CURBING

5. PLACE LANDSCAPE TREES AND SHRUBS AS NOTED ON THE LANDSCAPE PLAN

6. INSTALL BITUMINOUS CONCRETE TOP COURSE AND STRIPE

7. UPON TURF ESTABLISHMENT, REMOVE ALL SOIL EROSION AND SEDIMENT CONTROL MEASURES

8. REMOVE SEDIMENT DEPOSITS FROM STORMWATER POND

9. FLUSH AND CLEAN STORM DRAINAGE SYSTEM

10. OBTAIN ALL REQUIRED SIGN-OFFS FROM ALL APPROPRIATE CITY DEPARTMENTS

11. FILE NOTICE OF TERMINATION

SOIL EROSION-SEDIMENT CONTROL NARRATIVE & NOTES

PROPOSED DEVELOPMENT

1. CONSTRUCTION WILL INCLUDE EARTHWORK, CURBING, PAVING, UTILITY INSTALLATION, LANDSCAPING AND BUILDING CONSTRUCTION. ALL DEMOLITION DEBRIS AND SOIL REMOVAL RELATED TO CONSTRUCTION SHALL BE REMOVED AND DISPOSED OF IN ACCORDANCE WITH APPLICABLE STATE AND LOCAL LAWS GOVERNING SUCH ACTIVITIES. THE TOTAL DISTURBED AREA IS ANTICIPATED TO BE APPROXIMATELY 11.7 ACRES. REFER TO THE PROJECT SURVEY FOR EXISTING CONDITIONS RELATED TO EXISTING TOPOGRAPHY, DRAINAGE PATTERNS, GROUND COVER, AND VEGETATION.

2. THE DETAILED EROSION AND SEDIMENT CONTROL MEASURES ARE SHOWN ON DRAWINGS CE100 – CE103. THE PROPOSED MEASURES HAVE BEEN DESIGNED TO PREVENT THE MIGRATION OF SOIL SEDIMENT FROM THE SITE.

SOIL EROSION AND SEDIMENT CONTROL NOTES

1. CONTRACTOR SHALL BE RESPONSIBLE FOR PHASING OF SOIL AND SEDIMENT CONTROL PRACTICES TO ENSURE SOIL AND SEDIMENT ARE PREVENTED FROM LEAVING THE DEVELOPMENT AREA THROUGHOUT DEMOLITION & CONSTRUCTION.

2. THE SOIL AND SEDIMENT CONTROL PRACTICES MUST BE INSTALLED IN ACCORDANCE WITH THE LOCAL GOVERNING AUTHORITY AND THE CONNECTICUT COUNCIL ON SOIL AND WATER CONSERVATION AND THE 2002 CONNECTICUT GUIDELINES FOR SOIL EROSION AND SEDIMENT CONTROL.

3. EROSION AND SEDIMENT CONTROL DEVICES MUST BE INSTALLED PRIOR TO START OF DEMOLITION AND CONSTRUCTION AND DISTURBANCE OF SITE CONTRIBUTORY DRAINAGE AREAS. THE OWNER OR ITS CONTRACTOR SHALL INSPECT, REPAIR AND REMOVE ALL SEDIMENT AND EROSION CONTROL DEVICES, AS INDICATED HEREIN. ALL EARTH CHANGES SHALL BE DESIGNED, CONSTRUCTED, AND COMPLETED IN SUCH A MANNER SO THAT THE EXPOSED AREA OF ANY DISTURBED LAND SHALL BE LIMITED TO THE SHORTEST POSSIBLE PERIOD OF TIME.

4. DISPOSAL OF COLLECTED SEDIMENT SHALL BE MADE TO AREA DESIGNATED BY THE OWNER'S SOIL ENGINEER.

5. FILTER FABRIC/SILT FENCE WILL BE INSTALLED ALONG THE TOE OF ALL CRITICAL CUT AND FILL SLOPES.

6. ALL TOPSOIL NOT TO BE USED FOR FINAL GRADING/LANDSCAPED AREAS SHALL BE REMOVED FROM THE SITE IMMEDIATELY, IN ACCORDANCE WITH APPLICABLE STATE AND LOCAL LAW. ALL TOPSOIL TO BE USED IN LANDSCAPED AREAS SHALL BE STORED/STOCKPILED IN ACCORDANCE WITH APPLICABLE STATE AND LOCAL LAW STANDARDS.

7. ALL AREAS WITHIN 500 FEET OF AN INHABITED DWELLING SHALL BE WETTED AS NECESSARY TO PROVIDE DUST CONTROL.

8. PAVEMENT BASE COURSE MUST BE PLACED IN ALL NEW ROADWAY AREAS UPON COMPLETION OF FINE GRADING.

9. THE CONTRACTOR IS RESPONSIBLE FOR ALL PAVED ROADWAYS, ON AND OFF-SITE, WHICH MUST BE KEPT FREE OF SITE GENERATED SEDIMENT AT ALL TIMES. DUST SHALL BE CONTROLLED BY SPRINKLING OR OTHER APPROVED METHOD.

10. ALL STORM DRAINAGE OUTLETS MUST BE STABILIZED, AS REQUIRED, BEFORE THE DISCHARGE POINTS BECOME OPERATIONAL.

11. SILT FENCES AND BARRIERS MUST BE CLEANED OR REPLACED PERIODICALLY TO REMOVE BUILT-UP SILT.

12. SEDIMENT TRAPS MUST BE CLEANED WHEN CAPACITY HAS BEEN REDUCED BY AN AVERAGE OF 2'-0" OVER ITS TOTAL AREA OR TO 70% OF ITS DESIGN VOLUMES, WHICHEVER OCCURS FIRST.

13. ALL EROSION AND SEDIMENT CONTROL DEVICES MUST BE INSPECTED ON A DAILY BASIS AND CLEANED IMMEDIATELY AFTER EACH STORM.

14. ANY TEMPORARY OR PERMANENT FACILITY DESIGNED FOR THE CONVEYANCE OF WATER AROUND, THROUGH, OR FROM THE EARTH CHANGE AREA SHALL BE DESIGNED TO LIMIT THE WATER FLOW TO A NON-EROSIVE VELOCITY.

15. THE CONTRACTOR SHALL CORRECT ANY OMISSIONS, ERRORS, OR FIELD OPERATIONS IMMEDIATELY AND IN ACCORDANCE WITH THE GUIDELINES FOR SOIL EROSION AND SEDIMENT CONTROL.

16. ANY CONVEYANCE OF THIS PROJECT PRIOR TO ITS COMPLETION WILL TRANSFER FULL RESPONSIBILITY FOR COMPLIANCE WITH THE CERTIFIED PLAN TO ANY SUBSEQUENT OWNERS.

17. SOIL EROSION AND SEDIMENT CONTROLS MUST BE INSPECTED BY THE ZONING ENFORCEMENT OFFICER BEFORE WORK MAY COMMENCE.

18. THE PROPERTY OWNER AND/OR HIS/HER AGENTS MUST MAINTAIN (REPAIR/REPLACE), WHEN NECESSARY, THE SILTATION CONTROL UNTIL ALL DEVELOPMENT ACTIVITY IS COMPLETED AND ALL DISTURBED AREAS ARE PERMANENTLY STABILIZED.

TEMPORARY STABILIZATION

SEDIMENT DISPOSAL AREAS AND TOPSOIL STOCKPILES NOT SCHEDULED FOR CONSTRUCTION ACTIVITIES WITHIN THIRTY (30) DAYS OF DISTURBANCE SHALL BE STABILIZED AS FOLLOWS:

A. SOIL AMENDMENTS AS NECESSARY.

B. ANNUAL RYE GRASS SEEDING APPLIED AT A RATE OF NOT LESS THAN 1 LB. PER 1,000 SF.

C. MULCH ALL NEWLY SEEDED AREAS WITHIN 80 LBS. OF SALT HAY OR SMALL GRAIN STRAW PER 1,000 SF.

D. WHEN DISTURBED AREAS ARE SCHEDULED FOR IMMEDIATE LANDSCAPING THEY MAY BE MULCHED AND SEEDED PER ITEM C ABOVE.

PERMANENT STABILIZATION

REFER TO PLANS FOR PERMANENT STABILIZATION METHODS + PROPOSED SEED MIXES.

A. PERMANENT VEGETATION IS TO BE SEEDED OR SODDED ON ALL DISTURBED LAND AREAS WITHIN SEVEN (7) DAYS AFTER FINAL GRADING. MULCH AS NECESSARY FOR SEED PROTECTION AND ESTABLISHMENT. AMEND SOIL AS NEEDED PRIOR TO PERMANENT SEEDING. WHEN IT IS NOT POSSIBLE TO PERMANENTLY STABILIZE A DISTURBED AREA AFTER COMPLETION OF AN EARTH CHANGE OR WHEN SIGNIFICANT EARTH CHANGE ACTIVITY CEASES, TEMPORARY SOIL EROSION CONTROL MEASURES SHALL BE IMPLEMENTED. ALL TEMPORARY SOIL EROSION CONTROL MEASURES SHALL BE MAINTAINED UNTIL PERMANENT SOIL EROSION CONTROL MEASURES SHALL BE IMPLEMENTED. ALL DISTURBED AREAS, STOCKPILES OF FILL OR EXCAVATED MATERIAL SHALL BE STABILIZED IN SUCH A MANNER AS NOT TO CAUSE UNREASONABLE HAZARD TO PERSONS OR PROPERTY.

B. MATERIALS SPECIFICATION: LAWN + MEADOW AREAS

(I) ANY SOIL HAVING A pH OF FOUR OR LESS CONTAINING IRON SULFIDES SHALL BE COVERED WITH A MINIMUM OF TWELVE INCHES OF SOIL HAVING A pH OF FIVE OR MORE PRIOR TO SEED BED PREPARATION.

C. MULCHING SHALL BE DONE AT THE RATE OF SEVENTY TO NINETY POUNDS (70–90 LBS) PER 1,000 SQUARE FEET WITH UNROTTED SALT HAY.

D. LIQUID MULCH BINDERS MUST BE USED TO ANCHOR SALT HAY, HAY OR STRAY MULCHES.

(I) APPLICATIONS SHOULD BE HEAVIER AT EDGES WHERE WIND CATCHES THE MULCH IN VALLEYS AND AT CREATED BANKS. REMAINDER OF AREA SHOULD BE UNIFORM IN APPEARANCE.

(II) USE ONE OF THE FOLLOWING: SYNTHETIC OR ORGANIC BINDERS, BINDERS SUCH AS CURASOL DCA–70, PETRO SET, TERRA TACH, HYDRO MULCH AND AEROSPRAY MAY BE USED AT RATES RECOMMENDED BY THE MANUFACTURER OF ANCHOR MULCH MATERIALS. BINDERS CONTAINING PETROLEUM PRODUCTS SHALL NOT BE USED.

NOTE: ALL NAMES GIVEN ABOVE ARE REGISTERED TRADE NAMES. THIS DOES NOT CONSTITUTE A RECOMMENDATION OF THESE TO THE EXCLUSION OF OTHER PRODUCTS.

D. FILL MATERIAL SHALL BE FREE FROM DEBRIS, PERISHABLE OR COMBUSTIBLE MATERIAL AND FROZEN OR WET EARTH OR STONES LARGER THAN THREE INCHES IN MAXIMUM DIMENSION.

E. CONSTRUCTION AREAS SHALL BE PERIODICALLY SPRAYED WITH WATER UNTIL THE SURFACE IS WET TO CONTROL THE GENERATION OF DUST.

F. ALL REVISIONS AFTER APPROVAL HAS BEEN GRANTED SHALL BE FORWARDED TO THE APPROPRIATE DISTRICT FOR REVIEW.

G. THE LOCAL GOVERNING AUTHORITY SHALL RECEIVE WRITTEN NOTIFICATION SEVENTY TWO HOURS BEFORE THE START OF ANY CONSTRUCTION.

H. SEEDBED PREPARATION:

(I) TOPSOIL SHOULD BE A MINIMUM OF SIX INCHES DEEP (LIGHTLY COMPACTED) BEFORE SEEDING.

(II) TOPSOIL SHALL BE TESTED PRIOR TO SEEDING.

(III) WORK SOIL AMENDMENTS INTO SOIL AS NECESSARY AS NEARLY AS PRACTICAL TO A DEPTH OF FOUR INCHES WITH A DISC, SPRINGTOOTH HARROW OR OTHER SUITABLE EQUIPMENT. THE FINAL HARROWING OR DISCING OPERATION SHOULD BE ON THE GENERAL CONTOUR. CONTINUE ALL CLAY OR SILTY SOIL AND COARSE SANDS SHOULD BE ROLLED TO FIRM THE SEED BED WHEREVER FEASIBLE.

(IV) REMOVE FROM THE SURFACE ALL STONES ONE INCH OR LARGER IN ANY DIMENSION. REMOVE ALL OTHER DEBRIS, SUCH AS WIRE, CABLE, TREE ROOTS, PIECES OF CONCRETE, CLODS, LUMPS, OR OTHER UNSUITABLE MATERIAL.

(V) INSPECT SEED BED JUST BEFORE SEEDING. IF TRAFFIC HAS LEFT SOIL COMPACT, THE AREA MUST BE RETILLED AND FIRMED AS ABOVE.

CONTINGENCY SOIL EROSION AND SEDIMENT CONTROL NARRATIVE

19. THE GENERAL CONTRACTOR WILL DESIGNATE PERSONNEL FOR 24 HOUR EMERGENCY RESPONSE IN THE EVENT OF SEVERE WEATHER AND INCREASED POTENTIAL FOR SEVERE EROSION.

20. THE GENERAL CONTRACTOR IS REQUIRED TO MAINTAIN ON SITE OR HAVE THE ABILITY TO RETRIEVE WITHIN 12 HOURS THE FOLLOWING MATERIALS IN THE EVENT THAT THERE ARE DEFICIENCIES IN THE SESC MEASURES:

A. 25% OF THE INSTALLED LENGTH OF SILT FENCE

B. EQUIVALENT TONNAGE OF STONE FOR STABILIZATION OF 2 STABILIZATION ENTRANCES. STONE COULD BE USED FOR SLOPE REPAIRS, ENERGY DISSIPATER ENHANCEMENTS, ETC.

C. HEAVY EQUIPMENT CAPABLE OF TRENCHING/EXCAVATING LARGE AREAS TO DIVERT AND CONTROL RUNOFF IN A CONTROLLED MANNER.

D. HAVE DESIGNATED A HYDRO-SEED CONTRACTOR CAPABLE OF RESPONDING TO THE SITE WITHIN 12 HOURS

21. ANY STUMP GRINDINGS OR WOOD CHIPS GENERATED ON-SITE SHOULD BE RETAINED FOR USE TO BACK UP SILT FENCES.

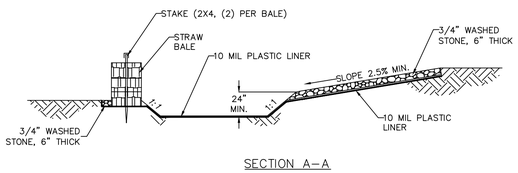

SECTION A–A

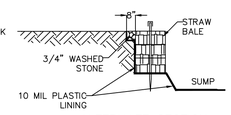

ALTERNATE SECTION

USE WHERE MORE THAN ONE ACCESSIBLE SIDE IS NEEDED

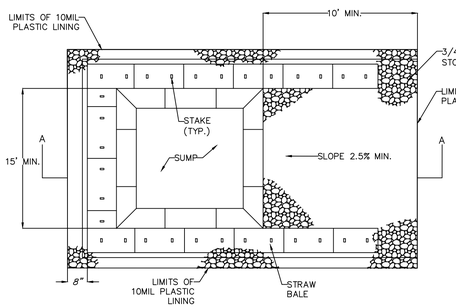

PLAN

WASHOUT SIGN

NOTES:
1. PIT IS SPECIFICALLY DESIGNATED, DIKED AND IMPERVIOUS CONTAINMENT TO PREVENT CONTACT BETWEEN CONCRETE, WASH AND STORMWATER.
2. WASH AND STORMWATER.
3. WASH WATER SHALL NOT BE ALLOWED TO FLOW TO SURFACE WATER.
4. .FACILITY MUST HOLD SUFFICIENT VOLUME TO CONTAIN CONCRETE WASTE WITH A MINIMUM FREEBOARD OF 12".
5. FACILITY SHALL NOT BE FILLED BEYOND 95% CAPACITY UNLESS A NEW FACILITY IS CONSTRUCTED.
6. SAW CUT PORTLAND CEMENT CONCRETE, RESIDUE FROM SAWCUT & GRINDING TO BE DISPOSED OF IN THE PIT.
7. CONCRETE WASHOUTS SHALL BE LOCATED A MINIMUM OF 100' FROM DRAINAGE WAYS, INLETS, & SURFACE WATERS.
8. MANUFACTURING CONCRETE WASHOUT DEVICES MAY BE USED IF REMOVED FROM THE SITE WHEN 95% FULL CAPACITY.

1 CONCRETE WASHOUT

N.T.S.

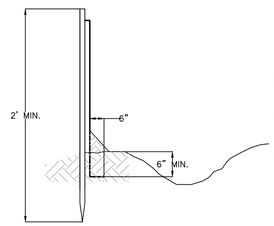

INSTALLATION NOTES:
1. EXCAVATE AND SECURE BOTTOM 6" OF SILT FENCE BELOW GRADE AS SHOWN.
2. EXCEPT FOR THE END POST, DRIVE ALL POSTS INTO THE GROUND AT BACK SIDE OF TRENCH SPACED A MAXIMUM OF 8 FT O. C.
3. SECURE FILTER FABRIC WITH DRAWSTRING TO POST WITH METAL FASTENERS AND REINFORCEMENT BETWEEN FASTENER AND FABRIC.

2 SILT FENCE

N.T.S.

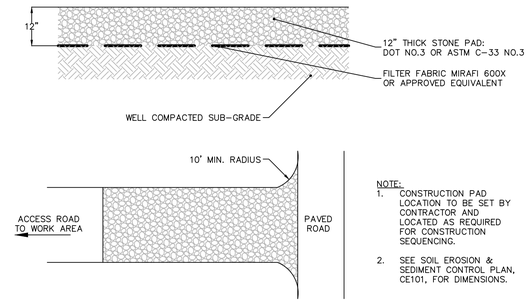

NOTE:
1. CONSTRUCTION PAD LOCATION TO BE SET BY CONTRACTOR AND LOCATED AS REQUIRED FOR CONSTRUCTION SEQUENCING.
2. SEE SOIL EROSION & SEDIMENT CONTROL PLAN, CE101, FOR DIMENSIONS.

3 CONSTRUCTION ENTRANCE / ANTI-TRACK PAD

N.T.S.

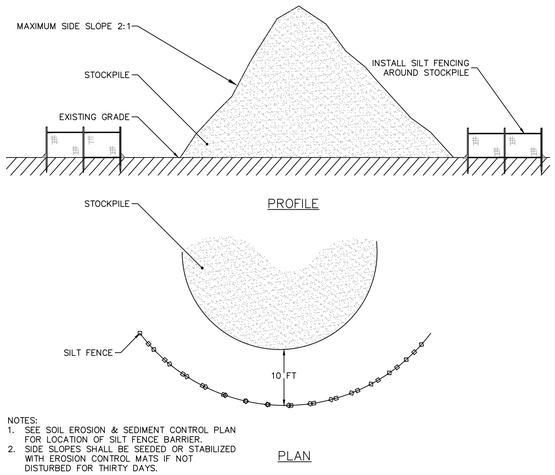

NOTES:
1. SEE SOIL EROSION & SEDIMENT CONTROL PLAN FOR LOCATION OF SILT FENCE BARRIER.
2. SIDE SLOPES SHALL BE SEEDED OR STABILIZED WITH EROSION CONTROL MATS IF NOT DISTURBED FOR THIRTY DAYS.

4 TEMPORARY SOIL STOCKPILE

N.T.S.

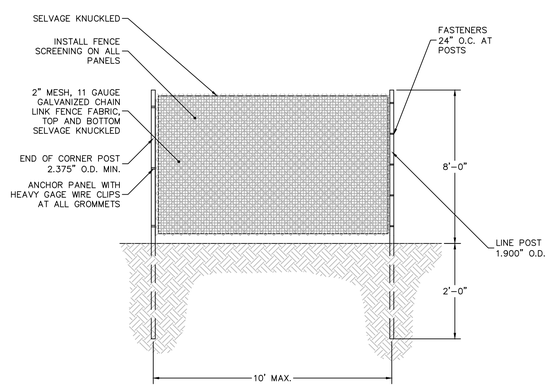

NOTES:
1. PIPE POSTS SHALL BE IMBEDDED INTO THE GROUND. PEDESTAL MOUNTED FENCING WILL ONLY BE ALLOWED AT AREAS APPROVED BY THE PROJECT MANAGER. WHEN ALLOWED, PROVIDE CONCRETE OR GALVANIZED–STEEL BASES FOR SUPPORTING POSTS. PROVIDE BLUE REINFORCED SCRIM SHEETING ON ALL FENCING.

5 TEMPORARY CONSTRUCTION FENCE

N.T.S.

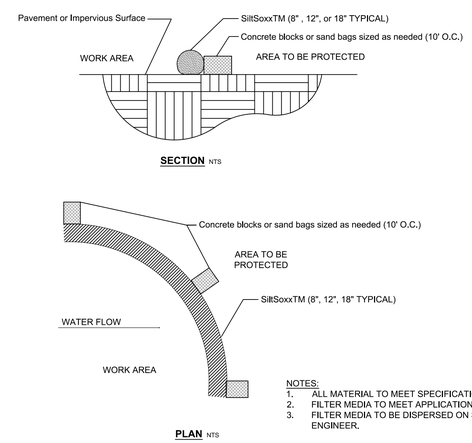

NOTES:
1. ALL MATERIAL TO MEET SPECIFICATIONS.
2. FILTER MEDIA TO MEET APPLICATION REQUIREMENTS.
3. FILTER MEDIA TO BE DISPERSED ON SITE, AS DETERMINED BY ENGINEER.

SiltSoxxTM for Sediment Control on Pavement

NTS

6 COMPOST FILTER TUBE

N.T.S.

FOR PERMITTING ONLY, NOT FOR CONSTRUCTION

Date	Description	No.

Revisions

LANGAN
Langan Engineering and Environmental Services, Inc.
555 Long Wharf Drive
New Haven, CT 06511
T: 203.562.5771 F: 203.789.6142 www.langan.com

Project
NORTH BLOOMFIELD COMMERCE CENTER
116 WEST DUDLEY TOWN ROAD
MAP 16, LOT 43
BLOOMFIELD CONNECTICUT

APPLICANT/DEVELOPER:
NORTHPOINT DEVELOPMENT
3315 NORTH OAK TRAFFICWAY
KANSAS CITY, MO 64116

SUBMISSION PURPOSE: INLAND WETLANDS AND WATERCOURSES COMMISSION PERMIT APPLICATION

Drawing Title
SOIL EROSION & SEDIMENT CONTROL DETAILS I

Project No. 140255601
Date 12/08/2022
Drawn By JMGM
Checked By TSO
Drawing No. CE501

© 2022 Langan

Project No. 140255601

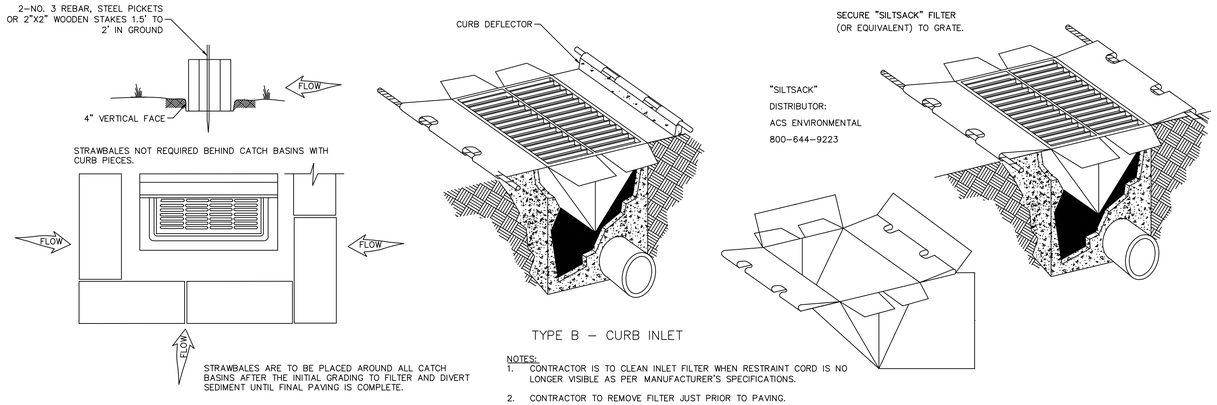

NOTES:
1. CONTRACTOR IS TO CLEAN INLET FILTER WHEN RESTRAINT CORD IS NO LONGER VISIBLE AS PER MANUFACTURER'S SPECIFICATIONS.
2. CONTRACTOR TO REMOVE FILTER JUST PRIOR TO PAVING.

1 INLET PROTECTION

N.T.S.

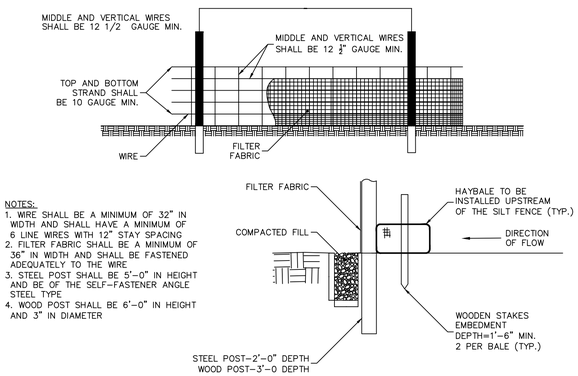

NOTES:
1. WIRE SHALL BE A MINIMUM OF 32" IN WIDTH AND SHALL HAVE A MINIMUM OF 6 LINE WIRES WITH 12" STAY SPACING
2. FILTER FABRIC SHALL BE A MINIMUM OF 36" IN WIDTH AND SHALL BE FASTENED ADEQUATELY TO THE WIRE
3. STEEL POST SHALL BE 5'-0" IN HEIGHT AND BE OF THE SELF-FASTENER ANGLE STEEL TYPE
4. WOOD POST SHALL BE 6'-0" IN HEIGHT AND 3" IN DIAMETER

2 SILT FENCE BACKED BY HAYBALE

N.T.S.

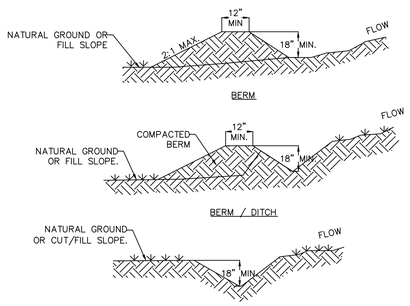

NOTES:
1. POSITIVE GRADE MUST BE PROVIDED TO ASSURE DRAINAGE. 2:1 MAX. SIDE SLOPE. IF SLOPE EXCEEDS 2% OR CHANNEL IS CONSTRUCTED IN FILL, PROVIDE CHANNEL LINER PER DETAIL, EC 5, TRY NOT TO EXCEED 5% (HIGH RUNOFF VELOCITIES RESULT). MAXIMUM DRAINAGE AREA IS 5.00 ACRES WITHOUT SUPPORTING CALCULATIONS FOR PERMANENT CHANNEL. DIVERSIONS AT THE TOPS OF SLOPES MUST EMPTY INTO AN APPROVED SLOPE DRAIN (SEE DETAILS). THE BERM/DITCH IS THE MOST COMMONLY USED DIVERSION.
2. MACHINE COMPACTING OF ALL FILL IS REQUIRED/
3. DIVERSIONS SUFFICIENT TO DIRECT ALL SEDIMENT-LADEN STORMWATER INTO SEDIMENT CONTROL DEVICE MUST BE INSTALLED PRIOR TO CLEARING AND GRUBBING OF AREA (OR IN CONJUNCTION WITH THIS OPERATION IF SEDIMENT CONTROLS AND DIVERSIONS ARE INSTALLED AT EACH CRITICAL POINT AS INDICATED).
4. DIVERSIONS SHOULD BE LOCATED AS SHOWN ON THE PLANS AND TO MINIMIZE DAMAGES BY CONSTRUCTION OPERATIONS.
5. DIVERSIONS SHOULD BE SEEDED AND LINED WITH STRAW MAT IF THEY ARE TO REMAIN IN PLACE OVER 14 DAYS.
6. CHECK DIVERSIONS AFTER EACH RAIN, AND ONCE PER SEVEN CALENDAR DAYS OR MORE FREQUENTLY IF REQUIRED BY REGULATORY AGENCY. REPAIR AS NEEDED TO MAINTAIN FUNCTION.

3 TEMPORARY DIVERSION BERM/DITCH

N.T.S.

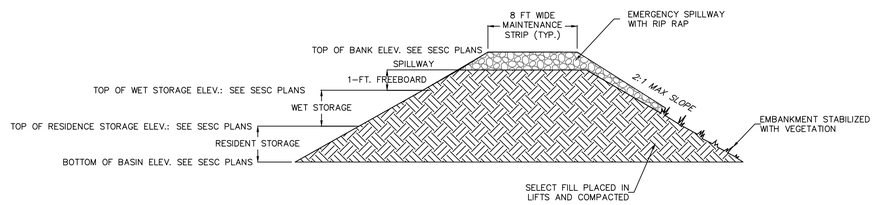

NOTES:
1. BASIN DEWATERING MUST OCCUR WITHIN 24 TO 72 HOURS.
2. EMERGENCY SPILLWAY TO BE STABILIZED WITH RIP RAP (IF APPLICABLE)

4 TEMPORARY SEDIMENT BASIN DETAIL

N.T.S.

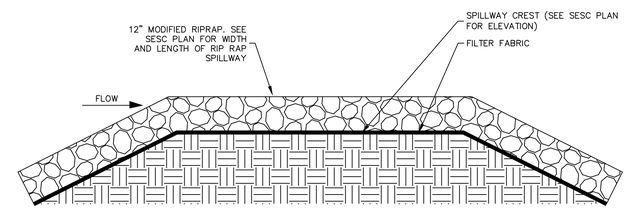

NOTE:
1. RIP-RAP SHALL HAVE D_{50} OR 6 INCHES.

5 RIP-RAP SPILLWAY

N.T.S.

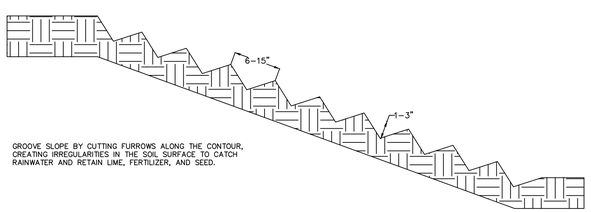

GROOVE SLOPE BY CUTTING FURROWS ALONG THE CONTOUR, CREATING IRREGULARITIES IN THE SOIL SURFACE TO CATCH RAINWATER AND RETAIN LIME, FERTILIZER, AND SEED.

6 SURFACE ROUGHENING

N.T.S.

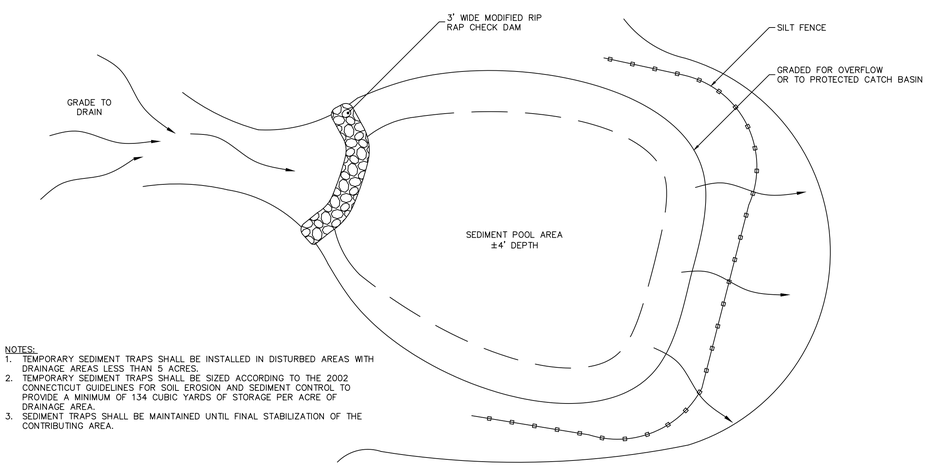

NOTES:
1. TEMPORARY SEDIMENT TRAPS SHALL BE INSTALLED IN DISTURBED AREAS WITH DRAINAGE AREAS LESS THAN 5 ACRES.
2. TEMPORARY SEDIMENT TRAPS SHALL BE SIZED ACCORDING TO THE 2002 CONNECTICUT GUIDELINES FOR SOIL EROSION AND SEDIMENT CONTROL TO PROVIDE A MINIMUM OF 134 CUBIC YARDS OF STORAGE PER ACRE OF DRAINAGE AREA.
3. SEDIMENT TRAPS SHALL BE MAINTAINED UNTIL FINAL STABILIZATION OF THE CONTRIBUTING AREA.

7 TEMPORARY SEDIMENTATION TRAP

N.T.S.

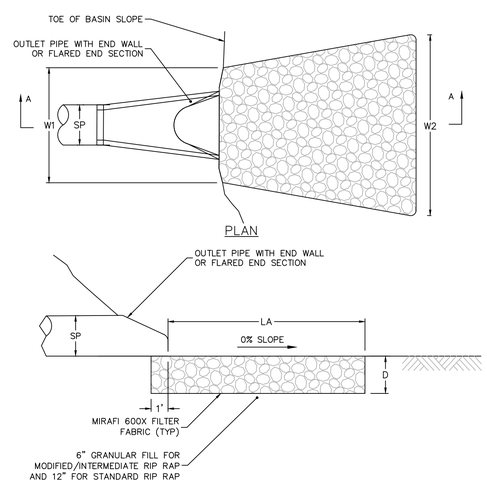

8 RIP-RAP APRON

N.T.S.

FOR PERMITTING ONLY, NOT FOR CONSTRUCTION

Date	Description	No.

Revisions

STATE OF CONNECTICUT
TIMOTHY S. OSBORN
No. 29,000
LICENSED PROFESSIONAL ENGINEER

LANGAN
Langan Engineering and Environmental Services, Inc.
555 Long Wharf Drive
New Haven, CT 06511
T: 203.562.5771 F: 203.789.6142 www.langan.com

Project
NORTH BLOOMFIELD COMMERCE CENTER
116 WEST DUDLEY TOWN ROAD
MAP 16, LOT 43
BLOOMFIELD CONNECTICUT

APPLICANT/DEVELOPER:
NORTHPOINT DEVELOPMENT
3315 NORTH OAK TRAFFICWAY
KANSAS CITY, MO 64116

SUBMISSION PURPOSE: INLAND WETLANDS AND WATERCOURSES COMMISSION PERMIT APPLICATION

Drawing Title
SOIL EROSION & SEDIMENT CONTROL DETAILS II

Project No. 140255601
Date 12/08/2022
Drawn By JMGM
Checked By TSO
Drawing No. CE502

LANGAN
Project No. 140255601

© 2022 Langan

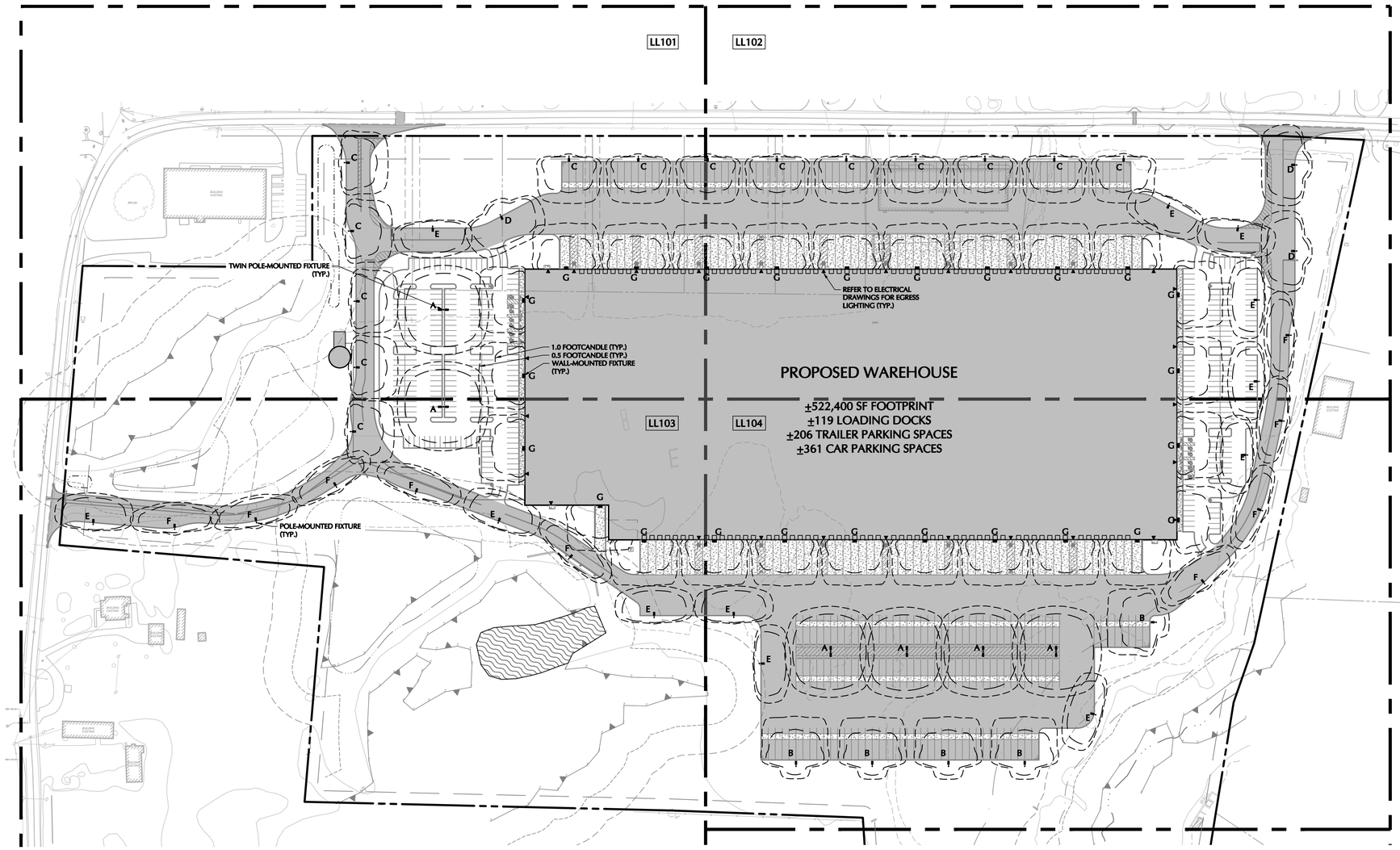

CT NAD 83

SHEET LEGEND

1" = 1,000'

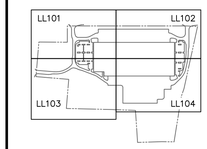

SITE LIGHTING SCHEDULE

SYMBOL	KEY	QTY.	FIXTURE MANUFACTURER	FIXTURE MODEL	FIXTURE DESCRIPTION	FIXTURE MOUNTING HEIGHT	LAMP	COLOR TEMPERATURE	OPTICS	LUMENS	LLF	FIXTURE CATALOGUE NO.	POLE MANUFACTURER	POLE DESCRIPTION	POLE LENGTH	POLE CATALOGUE NO.	REMARKS
	A	6	MCGRAW-EDISON	GALLEON LED	TWIN POLE-MOUNTED FIXTURE; COLOR: BLACK	24'-0"	225 W	3000K	TYPE V	30,052	0.90	GLEON-SA4-C-830-VOLT-5WQ-BK	MCGRAW-EDISON	ROUND STRAIGHT STEEL POLE; COLOR: BLACK	21'-0"	RSS-5-M-25-S-Y-N-2-X-V	POLE TO BE FACTORY-CUT TO 21' LENGTH, MOUNTED ON 3" HEIGHT EXPOSED CONCRETE BASE
	B	5	MCGRAW-EDISON	GALLEON LED	SINGLE POLE-MOUNTED FIXTURE; COLOR: BLACK	24'-0"	225 W	3000K	TYPE IV FORWARD THROW	28,703	0.90	GLEON-SA4-C-830-VOLT-T4FT-BK	MCGRAW-EDISON	ROUND STRAIGHT STEEL POLE; COLOR: BLACK	21'-0"	RSS-5-M-25-S-Y-N-1-X-V	POLE TO BE FACTORY-CUT TO 21' LENGTH, MOUNTED ON 3" HEIGHT EXPOSED CONCRETE BASE
	C	14	MCGRAW-EDISON	GALLEON LED	SINGLE POLE-MOUNTED FIXTURE WITH HOUSE-SIDE SHIELD; COLOR: BLACK	24'-0"	225 W	3000K	TYPE IV FORWARD THROW W/ HSS	28,703	0.90	GLEON-SA4-C-830-VOLT-T4FT-BK-HSS	MCGRAW-EDISON	ROUND STRAIGHT STEEL POLE; COLOR: BLACK	21'-0"	RSS-5-M-25-S-Y-N-1-X-V	POLE TO BE FACTORY-CUT TO 21' LENGTH, MOUNTED ON 3" HEIGHT EXPOSED CONCRETE BASE
	D	3	MCGRAW-EDISON	GALLEON LED	SINGLE POLE-MOUNTED FIXTURE; COLOR: BLACK	24'-0"	225 W	3000K	TYPE IV WIDE	28,333	0.90	GLEON-SA4-C-830-VOLT-T4W-BK	MCGRAW-EDISON	ROUND STRAIGHT STEEL POLE; COLOR: BLACK	21'-0"	RSS-5-M-25-S-Y-N-1-X-V	POLE TO BE FACTORY-CUT TO 21' LENGTH, MOUNTED ON 3" HEIGHT EXPOSED CONCRETE BASE
	E	12	MCGRAW-EDISON	GALLEON LED	SINGLE POLE-MOUNTED FIXTURE WITH HOUSE-SIDE SHIELD; COLOR: BLACK	24'-0"	225 W	3000K	TYPE III W/ HSS	28,534	0.90	GLEON-SA4-C-830-VOLT-T3-BK-HSS	MCGRAW-EDISON	ROUND STRAIGHT STEEL POLE; COLOR: BLACK	21'-0"	RSS-5-M-25-S-Y-N-1-X-V	POLE TO BE FACTORY-CUT TO 21' LENGTH, MOUNTED ON 3" HEIGHT EXPOSED CONCRETE BASE
	F	9	MCGRAW-EDISON	GALLEON LED	SINGLE POLE-MOUNTED FIXTURE WITH HOUSE-SIDE SHIELD; COLOR: BLACK	24'-0"	225 W	3000K	TYPE II W/ HSS	28,000	0.90	GLEON-SA4-C-830-VOLT-T2-BK-HSS	MCGRAW-EDISON	ROUND STRAIGHT STEEL POLE; COLOR: BLACK	21'-0"	RSS-5-M-25-S-Y-N-1-X-V	POLE TO BE FACTORY-CUT TO 21' LENGTH, MOUNTED ON 3" HEIGHT EXPOSED CONCRETE BASE
	G	25	MCGRAW-EDISON	GALLEON LED	WALL-MOUNTED FIXTURE COLOR: BLACK	24'-0"	225 W	3000K	TYPE IV FORWARD THORW	28,703	0.90	GLEON-SA4-C-830-VOLT-T4FT-BK	--	--	--	--	REFER TO ARCHITECTURAL DRAWINGS FOR FIXTURE LOCATIONS

NOTES:
1. REFER TO ELECTRICAL DRAWINGS FOR SITE LIGHTING VOLTAGES
2. ALL POLES TO RECEIVE FACTORY-INSTALLED VIBRATION DAMPENERS

PHOTOMETRIC LIGHTING TEMPLATE:

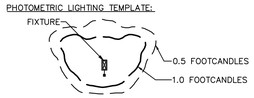

NOTE: THE PHOTOMETRIC TEMPLATE REPRESENTS LIGHT THROW FOR EACH INDIVIDUAL FIXTURE. IT DOES NOT REPRESENT LIGHT COMING FROM OTHER SOURCES.

STATISTICS

DESCRIPTION	AVG.	MAX.	MIN.	MAX./MIN.	AVG./MIN.
DRIVE AISLE – NORTH	2.0fc	4.6fc	0.5fc	9.2:1	4.1:1
DRIVE AISLE – SOUTH	1.9fc	5.1fc	0.5fc	10.2:1	3.8:1
PARKING – NORTH	1.6fc	4.1fc	0.5fc	8.2:1	3.2:1
PARKING – SOUTH	1.6fc	4.9fc	0.5fc	9.8:1	3.2:1
TRUCK COURT – EAST	1.6fc	5.9fc	0.5fc	11.8:1	3.1:1
TRUCK COURT – WEST	1.3fc	5.1fc	0.5fc	10.2:1	2.6:1
WALKWAY – NORTH	2.4fc	4.9fc	0.5fc	9.8:1	4.8:1
WALKWAY – SOUTH	1.8fc	4.8fc	0.5fc	9.6:1	3.6:1

NOTE: LIGHT PHOTOMETRY AND CALCULATIONS FOR ADJACENT STREET AND SITE LIGHTING ARE NOT INCLUDED IN THE ABOVE STATISTICS.

FOR PERMITTING ONLY, NOT FOR CONSTRUCTION

100 0 50 100
SCALE IN FEET

Date	Description	No.

Revisions

STATE OF CONNECTICUT MICHAEL SZURA 1339

Signature Date

MICHAEL SZURA
LICENSED LANDSCAPE ARCHITECT
STATE LIC. No. 1339

LANGAN
Langan Engineering and Environmental Services, Inc.
555 Long Wharf Drive
New Haven, CT 06511
T: 203.562.5771 F: 203.789.6142 www.langan.com

Project
NORTH BLOOMFIELD COMMERCE CENTER
116 WEST DUDLEY TOWN ROAD
MAP 16, LOT 43
BLOOMFIELD CONNECTICUT

APPLICANT/DEVELOPER:
NORTHPOINT DEVELOPMENT
3315 NORTH OAK TRAFFICWAY
KANSAS CITY, MO 64116

SUBMISSION PURPOSE: INLAND WETLANDS AND WATERCOURSES COMMISSION PERMIT APPLICATION

Drawing Title
OVERALL SITE LIGHTING PLAN

Project No. 140255601
Date 12/08/2022
Drawn By ML
Checked By JA

Drawing No. LL100

LANGAN

Project No. 140255601

© 2022 Langan

CT NAD 83

SHEET LEGEND

1" = 1,000'

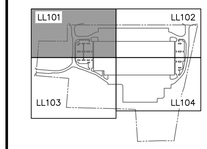

Date	Description	No.

Revisions

Signature — MICHAEL SZURA, LICENSED LANDSCAPE ARCHITECT, STATE LIC. No. 1339 — Date

LANGAN

Langan Engineering and Environmental Services, Inc.

555 Long Wharf Drive
New Haven, CT 06511

T: 203.562.5771 F: 203.789.6142 www.langan.com

Project

NORTH BLOOMFIELD COMMERCE CENTER

116 WEST DUDLEY TOWN ROAD
MAP 16, LOT 43

BLOOMFIELD CONNECTICUT

APPLICANT/DEVELOPER:
NORTHPOINT DEVELOPMENT
3315 NORTH OAK TRAFFICWAY
KANSAS CITY, MO 64116

SUBMISSION PURPOSE: INLAND WETLANDS AND WATERCOURSES COMMISSION PERMIT APPLICATION

Drawing Title

SITE LIGHTING PLAN I

Project No.	Drawing No.
140255601	LL101
Date: 12/08/2022	
Drawn By: ML	
Checked By: JA	

REFER TO SHEET LL100 FOR SITE LIGHTING SCHEDULE

FOR PERMITTING ONLY, NOT FOR CONSTRUCTION

SCALE: 1 INCH = 40 FEET

Project No. 140255601

© 2022 Langan

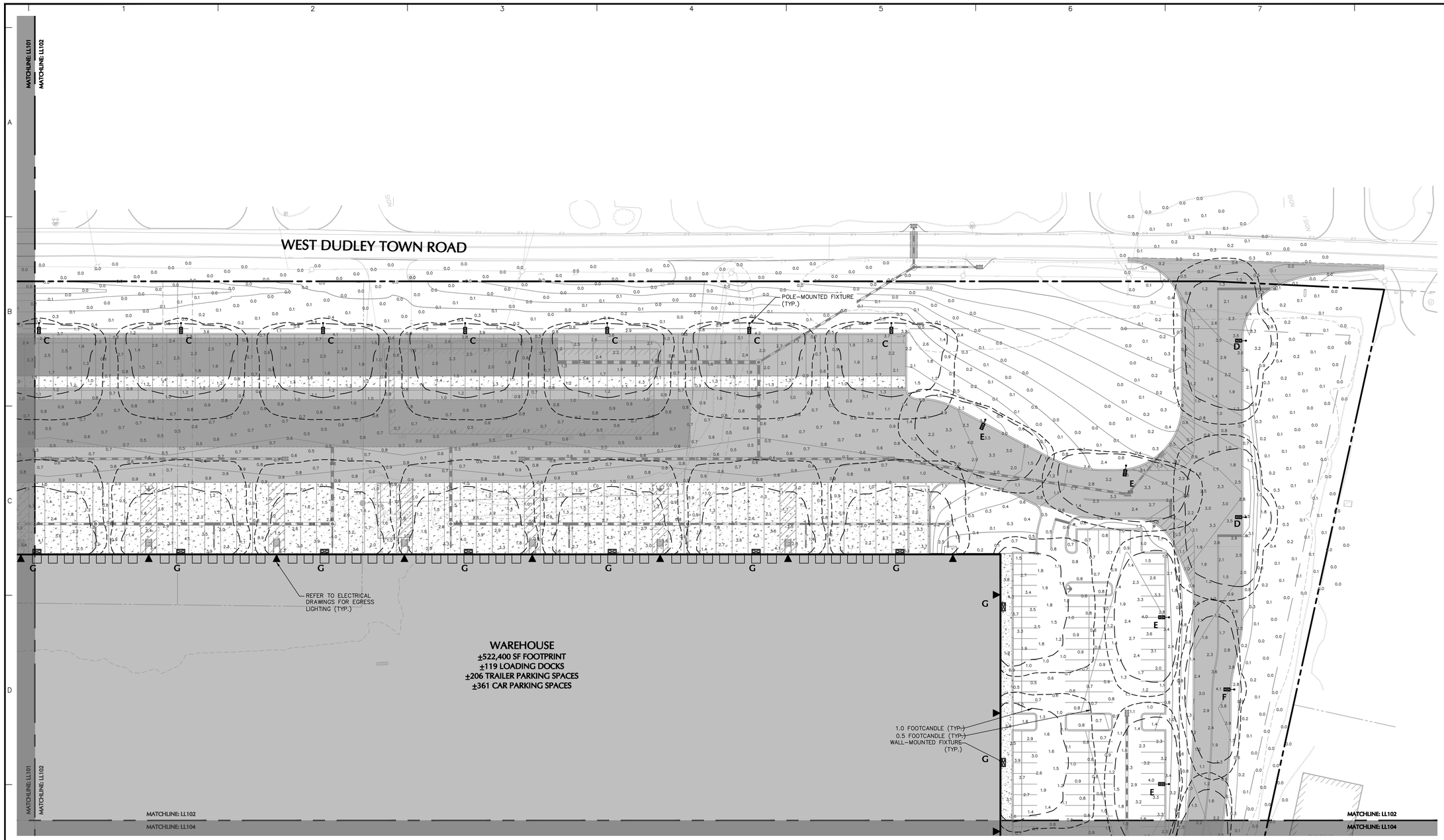

CT NAD 83

SHEET LEGEND

1" = 1,000'

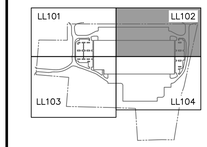

Date	Description	No.

Revisions

Signature — MICHAEL SZURA, LICENSED LANDSCAPE ARCHITECT, STATE LIC. No. 1339 — Date

LANGAN

Langan Engineering and Environmental Services, Inc.

555 Long Wharf Drive
New Haven, CT 06511

T: 203.562.5771 F: 203.789.6142 www.langan.com

Project

NORTH BLOOMFIELD COMMERCE CENTER

116 WEST DUDLEY TOWN ROAD
MAP 16, LOT 43

BLOOMFIELD CONNECTICUT

APPLICANT/DEVELOPER:
NORTHPOINT DEVELOPMENT
3315 NORTH OAK TRAFFICWAY
KANSAS CITY, MO 64116

SUBMISSION PURPOSE: INLAND WETLANDS AND WATERCOURSES COMMISSION PERMIT APPLICATION

Drawing Title

SITE LIGHTING PLAN II

Project No.	Drawing No.
140255601	LL102
Date: 12/08/2022	
Drawn By: ML	
Checked By: JA	

REFER TO SHEET LL100 FOR SITE LIGHTING SCHEDULE

FOR PERMITTING ONLY, NOT FOR CONSTRUCTION

40 0 10 25 40
SCALE: 1 INCH = 40 FEET

LANGAN

Project No. 140255601

© 2022 Langan

Date: 12/8/2022 Time: 09:33 User: acassella Style Table: Langan.stb Layout: LL102 Document Code: 140255601-0501-LL101-0103

CT NAD 83

SHEET LEGEND

1" = 1,000'

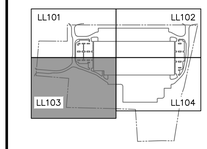

REFER TO SHEET LL100 FOR SITE LIGHTING SCHEDULE

FOR PERMITTING ONLY, NOT FOR CONSTRUCTION

Date	Description	No.

Revisions

STATE OF CONNECTICUT MICHAEL SZURA

Signature — Date

MICHAEL SZURA
LICENSED LANDSCAPE ARCHITECT
STATE LIC. No. 1339

LANGAN
Langan Engineering and Environmental Services, Inc.
555 Long Wharf Drive
New Haven, CT 06511
T: 203.562.5771 F: 203.789.6142 www.langan.com

Project
NORTH BLOOMFIELD COMMERCE CENTER
116 WEST DUDLEY TOWN ROAD
MAP 16, LOT 43
BLOOMFIELD CONNECTICUT

APPLICANT/DEVELOPER:
NORTHPOINT DEVELOPMENT
3315 NORTH OAK TRAFFICWAY
KANSAS CITY, MO 64116

SUBMISSION PURPOSE: INLAND WETLANDS AND WATERCOURSES COMMISSION PERMIT APPLICATION

Drawing Title
SITE LIGHTING PLAN III

Project No.	Drawing No.
140255601	LL103
Date: 12/08/2022	
Drawn By: ML	
Checked By: JA	

LANGAN

Project No. 140255601

© 2022 Langan

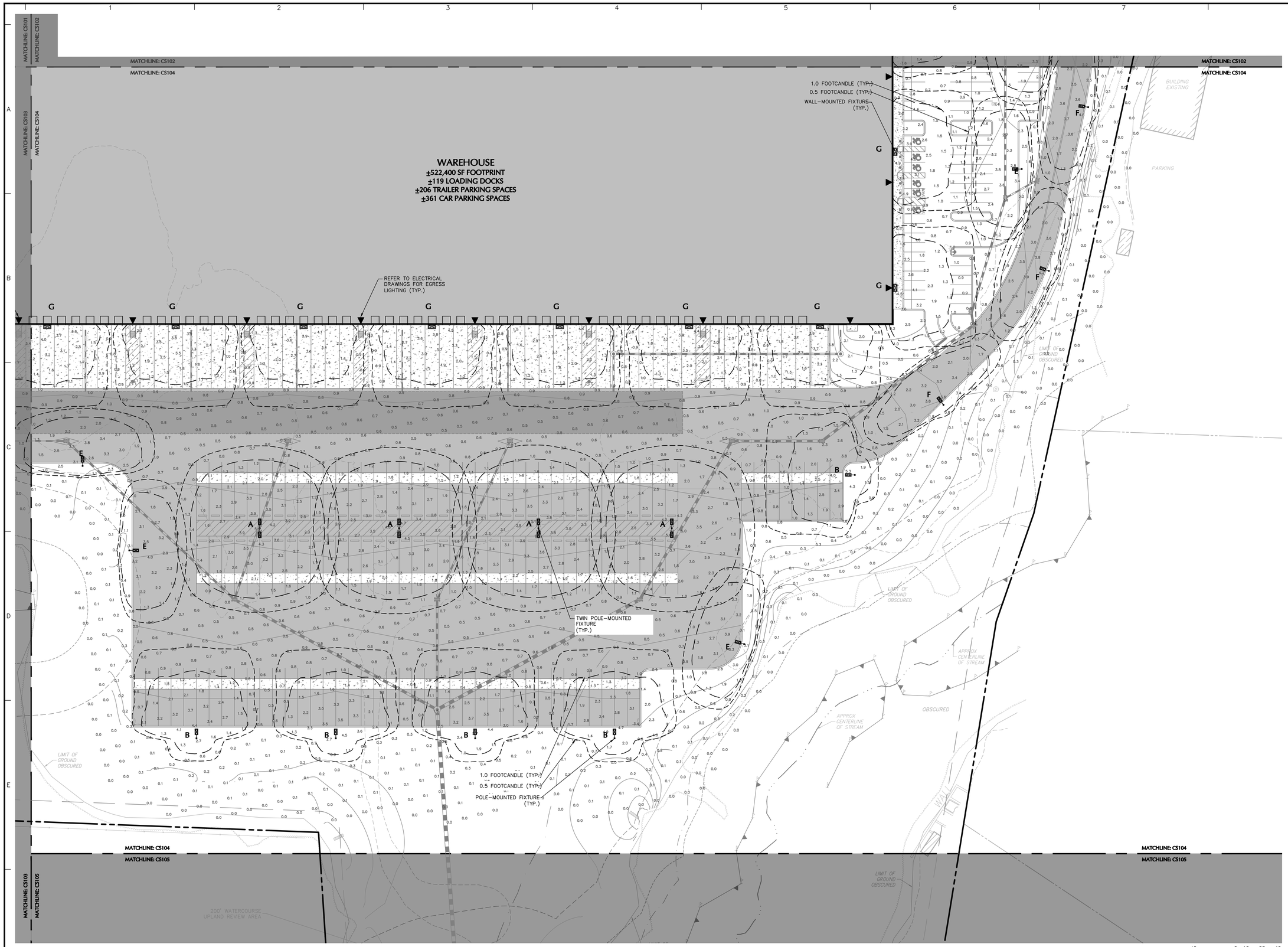

SHEET LEGEND

1" = 1,000'

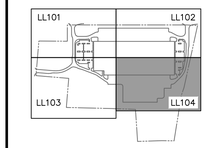

Date	Description	No.

Revisions

Signature — MICHAEL SZURA, LICENSED LANDSCAPE ARCHITECT, STATE LIC. No. 1339 — Date

LANGAN

Langan Engineering and Environmental Services, Inc.

555 Long Wharf Drive
New Haven, CT 06511

T: 203.562.5771 F: 203.789.6142 www.langan.com

Project

NORTH BLOOMFIELD COMMERCE CENTER

116 WEST DUDLEY TOWN ROAD
MAP 16, LOT 43

BLOOMFIELD CONNECTICUT

APPLICANT/DEVELOPER:
NORTHPOINT DEVELOPMENT
3315 NORTH OAK TRAFFICWAY
KANSAS CITY, MO 64116

SUBMISSION PURPOSE: INLAND WETLANDS AND WATERCOURSES COMMISSION PERMIT APPLICATION

Drawing Title

SITE LIGHTING PLAN IV

Project No.	Drawing No.
140255601	LL104
Date: 12/08/2022	
Drawn By: ML	
Checked By: JA	

REFER TO SHEET LL100 FOR SITE LIGHTING SCHEDULE

FOR PERMITTING ONLY, NOT FOR CONSTRUCTION

SCALE: 1 INCH = 40 FEET

LANGAN

Project No. 140255601

©2022 Langan

Date: 12/8/2022 Time: 09:34 User: acassella Style Table: Langan.stb Layout: LL104 Document Code: 140255601-0501-LL101-0105

SITE LIGHTING NOTES:

GENERAL

1. POINT–BY–POINT CALCULATIONS PROVIDED WITHIN HAVE BEEN PREPARED IN ACCORDANCE TO IESNA STANDARDS AND IN CONSIDERATION OF THE VARIABLES WITHIN THESE NOTES AND SITE LIGHTING SCHEDULE. THE VALUES SHOWN ON THE PLANS ARE NOT AN INDICATION OF THE INITIAL LIGHT INTENSITIES OF THE LAMPS. THESE VALUES ARE AN APPROXIMATION OF THE MAINTAINED INTENSITIES DELIVERED TO THE GROUND PLANE USING INDUSTRY STANDARD LIGHT LOSS FACTORS (LLF) WHICH COVER LAMP DEGRADATION AND NATURAL BUILDUP/DIRT DEGRADATION ON THE FIXTURE LENS. THE LIGHTING PLAN IS DESIGNED WITH AN INDUSTRY STANDARD LLF IN ACCORDANCE WITH GUIDANCE AS PROVIDED BY IESNA. MINOR VARIATIONS IN TOPOGRAPHY, PHYSICAL OBSTRUCTIONS, AMBIENT OR ADJACENT LIGHT SOURCES AND/OR OTHER POTENTIAL IMPACTS HAVE NOT BEEN INCLUDED IN THESE CALCULATIONS. THEREFORE, AS–BUILT LIGHT INTENSITIES MAY VARY, IN EITHER DIRECTION, FROM WHAT IS EXPLICITLY PORTRAYED WITHIN THESE DRAWINGS.NO GUARANTEE OF LIGHT LEVELS IS EXPRESSED OR IMPLIED BY THE POINT BY POINT CALCULATIONS SHOWN ON THESE PLANS.

2. LIGHT LEVEL POINT SPACING IS 15 FT. LEFT TO RIGHT AND 15 FT. TOP TO BOTTOM. POINT BY POINT CALCULATIONS ARE BASED ON THE LIGHT LOSS FACTOR AS STATED IN THE LIGHTING SCHEDULE.

COMPLIANCE

3. ALL SITE LIGHTING RELATED WORK AND MATERIALS SHALL COMPLY WITH CITY, COUNTY, AND OTHER APPLICABLE GOVERNING AUTHORITY REQUIREMENTS.

COORDINATION

4. CONTRACTOR TO COORDINATE POWER SOURCE WITH LIGHT FIXTURES TO ENSURE ALL SITE LIGHTING IS OPERATING EFFECTIVELY, EFFICIENTLY AND SAFELY.

5. REFER TO ELECTRIFICATION PLAN FOR PROVIDING ADEQUATE POWER FOR SITE LIGHTING.

6. CONTRACTOR TO COORDINATE LOCATION OF EASEMENTS, UNDERGROUND UTILITIES AND DRAINAGE BEFORE DRILLING POLE BASES.

7. INSTALLATION OF ALL LIGHTING FIXTURES, POLES, FOOTINGS, AND FEEDER CABLE TO BE COORDINATED WITH ALL SITE WORK TRADES TO AVOID CONFLICT WITH FINISHED AND PROPOSED WORK.

8. CONTRACTOR TO COORDINATE INSTALLATION OF UNDERGROUND FEEDER CABLE FOR EXTERIOR LIGHTING WITH EXISTING AND PROPOSED UTILITIES, SITE DRAINAGE SYSTEMS, AND PAVING. CONTRACTOR SHALL PROMPTLY NOTIFY THE OWNER'S REPRESENTATIVE SHOULD ANY UTILITIES, NOT SHOWN ON THE PLANS, BE FOUND DURING EXCAVATIONS.

POLES AND FOOTINGS

9. PROVIDE A CONCRETE BASE FOR EACH LIGHT POLE AT THE LOCATIONS INDICATED ON THE CONSTRUCTION DRAWINGS AND/OR IN ACCORDANCE WITH PROJECT PLANS AND SPECIFICATIONS RELATING DIRECTLY TO CAST–IN–PLACE CONCRETE. THE USE OF ALTERNATE LIGHTING FOUNDATIONS, SUCH AS PRECAST, MAY CHANGE THE SIZING AND REINFORCEMENT REQUIREMENTS FROM THOSE SHOWN ON THESE PLANS. CONTRACTOR TO SUBMIT SHOP DRAWINGS FOR REVIEW PRIOR TO ORDERING ANY SUBSTITUTED PRODUCTS.

10. CONTRACTOR SHALL EXAMINE AND VERIFY THAT SOIL CONDITIONS ARE SUITABLE TO SUPPORT LOADS EXERTED UPON THE FOUNDATIONS DURING EXCAVATION. CONTRACTOR SHALL NOTIFY ENGINEER OF ANY UNSATISFACTORY CONDITIONS.

11. POLE FOUNDATIONS SHALL NOT BE POURED IF FREE STANDING WATER IS PRESENT IN EXCAVATED AREA.

12. ALL POLES THAT ARE HIGHER THAN 25' SHALL BE EQUIPPED WITH FACTORY INSTALLED VIBRATION DAMPERS.

WALL MOUNTED FIXTURES

13. CONTRACTOR TO COORDINATE INSTALLATION OF ALL THE WALL MOUNTED FIXTURES AND ELECTRICAL CONNECTIONS TO SITE STRUCTURE(S) WITH BUILDING MEP, ARCHITECT, AND/OR OWNER.

14. INSTALLATION AND ELECTRICAL CONNECTIONS FOR WALL MOUNTED FIXTURES TO BE COORDINATED WITH ARCHITECTURAL, STRUCTURAL, UTILITY AND SITE PLANS AND TO BE IN ACCORDANCE WITH ALL APPLICABLE CODES.

ADJUSTMENT AND INSPECTION

15. CONTRACTOR TO OPERATE EACH LUMINAIRE AFTER INSTALLATION AND CONNECTION. INSPECT FOR IMPROPER CONNECTIONS AND OPERATION.

16. CONTRACTOR TO AIM AND ADJUST ALL LUMINAIRES TO PROVIDE ILLUMINATION LEVELS AND DISTRIBUTION AS INDICATED ON THE CONSTRUCTION DRAWINGS OR AS DIRECTED BY THE LANDSCAPE ARCHITECT AND/OR OWNER.

17. CONTRACTOR TO CONFIRM THAT LIGHT FIXTURES, TILT ANGLE AND AIMING MATCH SPECIFICATIONS ON THE PLANS.

LIGHTING SUBSTITUTION REQUIREMENTS

18. ALL LIGHTING SUBSTITUTIONS MUST BE MADE WITHIN 14 DAYS PRIOR TO THE BID DATE TO PROVIDE AMPLE TIME FOR REVIEW AND TO ISSUE AN ADDENDUM INCORPORATING THE SUBSTITUTION WITH THE FOLLOWING REQUIREMENTS:
    - A. ANY SUBSTITUTION TO LIGHTING FIXTURES, POLES, ETC. MUST BE APPROVED BY THE TOWNSHIP, OWNER, ENGINEER AND TENANTS. ANY COST ASSOCIATED WITH REVIEW AND/OR APPROVAL OF THE SUBSTITUTIONS SHALL BE ENTIRELY BORNE BY THE CONTRACTOR
    - B. COMPUTER PREPARED PHOTOMETRIC LAYOUT OF THE PROPOSED LIGHTED AREA WHICH INDICATES, BY ISOFOOTCANDLE, THE SYSTEM'S PERFORMANCE.
    - C. A PHOTOMETRIC REPORT FROM A NATIONAL INDEPENDENT TESTING LABORATORY WITH REPORT NUMBER, DATE, FIXTURE CATALOG NUMBER, LUMINAIRE AND LAMP SPECIFICATIONS; IES CALCULATIONS, POINT BY POINT FOOT CANDLE PLAN, STATISTIC ZONES SHOWING AVERAGE, MAXIMUM, MINIMUM AND UNIFORMITY RATIOS, SUMMARY, ISOLUX PLOT, AND CATALOGUE CUTS. CATALOGUE CUTS MUST IDENTIFY OPTICS, LAMP TYPE, DISTRIBUTION TYPE, REFLECTOR, LENS, BALLASTS, WATTAGE, VOLTAGE, FINISH HOUSING DESCRIPTION AND ALL OTHER PERTINENT INFORMATION.
    - D. POLE MANUFACTURER AASHTO CALCULATIONS INDICATING THE POLE AND ANCHOR BOLTS BEING SUBMITTED ARE CAPABLE OF SUPPORTING THE POLE AND FIXTURE SYSTEMS BEING UTILIZED IN ACCORDANCE WITH THE CONTRACT DOCUMENTS.
    - E. THE UNDERWRITERS LABORATORY LISTING AND FILE NUMBER FOR THE SPECIFIC FIXTURE(S) TO BE UTILIZED.
    - F. A COLOR PHOTOGRAPH THAT CLEARLY SHOWS THE REPLACEMENT FIXTURE POLE MOUNTED, THE FIXTURE'S COLOR, FINISH, AND PHYSICAL CHARACTERISTICS.

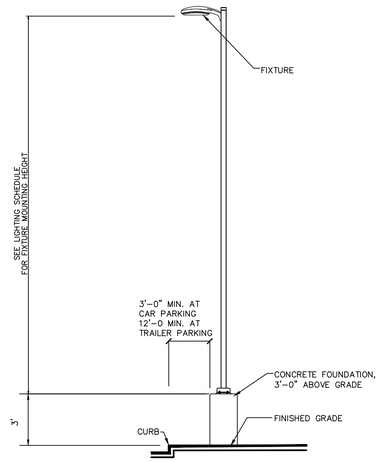

NOTE:

1. ALL LIGHTS WITH 25' MOUNTING HEIGHT OR GREATER TO RECEIVE FACTORY INSTALLED VIBRATION DAMPENERS.

1 FIXTURE AND POLE

NTS

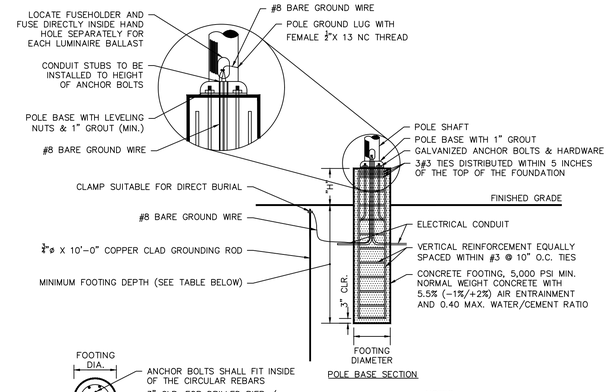

MOUNTING HEIGHT	FOOTING DEPTH	FOOTING DIAMETER	VERTICAL REINFORCEMENT	'H'
24'–0"	7'–6"	2'–6"	6 #5 BARS	3'–0"

NOTES:

1. SHAFT CAP, ARMS, BASE FLANGE, ANCHOR BOLTS, LEVELING NUTS, CONNECTION HARDWARE, BOLT COVERS, HANDHOLE COVER, AND BOLT CIRCLE TEMPLATE SHALL BE FURNISHED BY POLE MANUFACTURER.
2. EACH STANDARD TO BE PROTECTED AGAINST LIGHTNING WITH AN INTERCONNECTED GROUND ROD. THIS ROD SHALL BE BONDED PER SECTION NUMBER 250–86, N.E.C.
3. CONCRETE WORK SHALL COMPLY WITH THE REQUIREMENT OF ACI 318. CAST–IN–PLACE SHALL HAVE UNCONFINED COMPRESSIVE STRENGTH OF AT LEAST 5,000 PSI AT 28–DAYS. DEFORMED REINFORCEMENT BARS SHALL CONFORM TO ASTM A615, GRADE 60.
4. CONTRACTOR TO ENSURE CONCRETE POLE BASES ARE POURED / PLACED ABSOLUTELY VERTICAL & LEVEL.
5. IF POLE BASE IS CAST–IN–PLACE, POLE BASE SHALL BE ONE CONTINUOUS POUR. EXPOSED PORTION OF BASE SHALL BE HAND–RUBBED SMOOTH.
6. CONTRACTOR TO COMPACT SUBGRADE AROUND POLE BASE PER EARTHWORK SPECIFICATIONS / GEOTECH REPORT.
7. THE INFORMATION ILLUSTRATED IN THE LIGHT POLE FOUNDATION DETAIL HAS BEEN PROVIDED FOR GENERAL REFERENCE AND PRELIMINARY COST ESTIMATE PURPOSES. LIGHT POLE FOUNDATIONS SHOULD BE DESIGNED AND DETAILED BY A LICENSED STRUCTURAL ENGINEER BASED ON EXISTING SOIL CONDITIONS, LOCAL DESIGN STANDARDS AND MANUFACTURERS RECOMMENDATIONS.
8. CONTRACTOR TO CONFIRM GROUNDING DESIGN WITH MEP.

2 LIGHT POLE FOOTING

NTS

Project		Catalog #		Type	
Prepared by		Notes		Date	

McGraw-Edison

GLEON Galleon

Area / Site Luminaire

Product Features

LumenSafe Technology · Light ARchitect™ · BAA

Interactive Menu

- Ordering Information page 2
- Mounting Details page 3
- Optical Distributions page 4
- Product Specifications page 4
- Energy and Performance Data page 4
- Control Options page 9

Product Certifications

ISTI Approved · DLC · DLC Premium · 3G VIB · IP66 · UL Certified · IDA Approved · 5 YEAR

Quick Facts

- Lumen packages range from 4,200 - 80,800 (34W - 640W)
- Efficacy up to 156 lumens per watt
- Options to meet Buy American and other domestic preference requirements

Connected Systems

- WaveLinx
- Enlighted

Dimensional Details

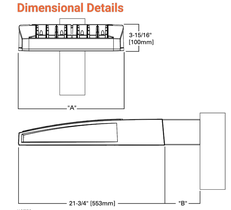

Number of Light Squares	'A' Width	'B' Standard Arm Length	'B' Extended Arm Length[1]	'B' Quick Mount Arm Length	'B' Quick Mount Extended Arm Length
1-4	15-1/2"	7"	10"	10-5/8"	16-9/16"
5-6	21-5/8"	7"	10"	10-5/8"	16-9/16"
7-8	27-5/8"	7"	13"	10-5/8"	--
9-10	33-3/4"	7"	16"	--	--

NOTES:
For arm selection requirements and additional line art, see Mounting Details section.

NOTES:
1. Visit https://www.designlights.org/search/ to confirm qualification. Not all product variations are DLC qualified.
2. IDA Certified for 3000K CCT and warmer only.

COOPER Lighting Solutions

PSS000020EN page 1
September 1, 2022 7:36 PM

3 LIGHT FIXTURE

NTS

Steel Poles

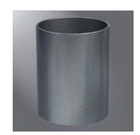

RSS ROUND STRAIGHT STEEL

Catalog #		Type
Project		
Comments		Date
Prepared by		

FEATURES
- ASTM Grade steel base plate with ASTM A366 base cover
- Hand hole assembly 3" x 5" on 5" and 6" poles, 2" x 4" on 4" poles
- 10'-30' mounting heights
- Drilled or tenon (specify)

DESIGN CONSIDERATIONS - VIBRATIONS AND NON-GROUND MOUNTED INSTALLATIONS

The information contained herein is for general guidance only and is not a replacement for professional judgment. Design considerations for wind-induced vibrations and non-ground mounted installations (e.g., installations on bridges or buildings) are not included in this document. Consult with a professional, and local and federal standards, before ordering to ensure product is appropriate for the intended purpose and installation location. Refer to the Cooper Lighting Solutions Light Pole White Paper for risk factors and design considerations. Learn more.

NOTE: The Limited Warranty for this product specifically excludes fatigue failure or similar damage resulting from vibration, harmonic oscillation or resonance.

Specifications and dimensions subject to change without notice. Consult your lighting representative at Cooper Lighting Solutions or visit www.cooperlighting.com for available options, accessories and ordering information.

ORDERING INFORMATION

SAMPLE NUMBER: RSS4A20SF2XG

Product Family	Shaft Size (Inches)[1]	Wall Thickness (Inches)	Mounting Height (Feet)	Base Type	Finish	Mounting Type	Number and Location of Arms	Arm Lengths (Feet)	Options (Add as Suffix)
RSS=Round Straight Steel	4=4" 5=5" 6=6"	A=0.120"[4] M=0.188"	10=10' 15=15' 20=20' 25=25' 30=30'	S=Square Steel Base	A=Dark Bronze G=Galvanized Steel J=Summit White K=Carbon Bronze L=Dark Platinum R=Hartford Green S=Silver T=Graphite Metallic V=Grey W=White X=Custom Color N=Black	2=2-3/8" O.D. Tenon (4" Long) 3=3-1/2" O.D. Tenon (5" Long) 4=4" O.D. Tenon (8" Long) 5=2 O.D. Tenon (4" Long) 6=2-3/8" O.D. Tenon (8" Long) 7=4" O.D. Tenon (10" Long) A=Type A Drilling C=Type C Drilling E=Type E Drilling F=Type F Drilling G=Type G Drilling H=Type H Drilling K=Type K Drilling M=Type M Drilling N=Type N Drilling P=Standard Upsweep Arm[7] Z=Type Z Drilling	S=Single 2=2 at 180° 3=Triple 4=3 at 90° 5=3 at 90° 6=3 at 90° 7=2 at 120° X=None	X=None 2=2' 3=2.5' 4=4' 6=6' 8=8'	A=1/2" Tapped Hub[5] B=3/4" Tapped Hub[5] C=Convenience Outlet[6] E=GFCI Convenience Outlet[6] G=Ground Lug H=Additional Hand Hole V=Vibration Dampener

NOTES: 1. All shaft sizes nominal. **2.** Square poles are 3 at 90°, round poles are 3 at 120°. **3.** Tapped Hub is located 5' below the pole top and on the same side of pole as hand hole, unless specified otherwise. **4.** Outlet is located 4' above base and on same side of pole as hand hole, unless specified otherwise. Receptacle not included, provision only. **5.** Additional hand hole is located 12" below pole top and 90° from standard hand hole location, unless otherwise specified. **6.** Available in 4" shaft size only. **7.** Arm must be ordered separately.

ANCHORAGE DATA

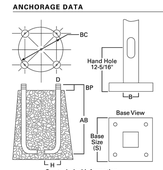

See technical information.

Pole	Template Number	Bolt Number	Bolt Circle (inches)	Number of Bolts	Bolt Size (inches)
RSS4	TMP4	AB1	11	4	3/4 x 25 x 3
RSS5	TMP4	AB1	11	4	3/4 x 25 x 3
RSS6	TMP5	AB3	12.5	4	1 x 36 x 4

COOPER Lighting Solutions

TD513015EN
April 14, 2021 5:27 PM

4 LIGHT POLE

NTS

REFER TO SHEET LL100 FOR SITE LIGHTING SCHEDULE

FOR PERMITTING ONLY, NOT FOR CONSTRUCTION

Date	Description	No.

Revisions

STATE OF CONNECTICUT · MICHAEL SZURA

Signature · Date

MICHAEL SZURA
LICENSED LANDSCAPE ARCHITECT
STATE LIC. No. 1339

LANGAN
Langan Engineering and Environmental Services, Inc.
555 Long Wharf Drive
New Haven, CT 06511
T: 203.562.5771 F: 203.789.6142 www.langan.com

Project
NORTH BLOOMFIELD COMMERCE CENTER
116 WEST DUDLEY TOWN ROAD
MAP 16, LOT 43
BLOOMFIELD CONNECTICUT

APPLICANT/DEVELOPER:
NORTHPOINT DEVELOPMENT
3315 NORTH OAK TRAFFICWAY
KANSAS CITY, MO 64116

SUBMISSION PURPOSE: INLAND WETLANDS AND WATERCOURSES COMMISSION PERMIT APPLICATION

Drawing Title
SITE LIGHTING DETAILS

Project No.	Drawing No.
140255601	LL501
Date: 12/08/2022	
Drawn By: ML	
Checked By: JA	

LANGAN · Project No. 140255601

© 2022 Langan

BLOOMFIELD REGULATIONS COMPLIANCE CHART

SECTION	REQUIRED/ PERMITTED	PROVIDED/ PROPOSED	COMPLIANCE
6.1.B.3.f.	PARKING AREAS SHALL BE PLANTED WITH TREES A MINIMUM OF FOUR (4) INCHES IN CALIPER MEASURED SIX (6) INCHES ABOVE GROUND LEVEL, SO THAT THERE IS AT LEAST ONE TREE PER TEN (10) PARKING SPACES WITHIN THE PARKING LOT.	ALL SHADE TREES ARE SPECIFIED AT FOUR (4) INCH CALIPER MINIMUM. NORTH LOT: 152 SPACES, 152 / 10 = 15.2 = 16 TREES REQUIRED, 16 TREES PROPOSED SOUTH LOT: 209 SPACES, 209 / 10 = 20.9 = 21 TREES REQUIRED, 21 TREES PROPOSED	COMPLIES
6.1.B.3.g.	SUCH TREES MUST BE STAKED WITH TWO (3) THREE (3) INCH DIAMETER STAKES AND PROTECTED BY CURBING AGAINST DAMAGE BY VEHICLES.	PLANTING DETAILS INCLUDE STAKING.	COMPLIES
6.1.D.3.	BUFFER YARD PLANTING MATERIALS SHALL CONFORM TO THE FOLLOWING STANDARDS: A. CANOPY TREES SHALL BE DECIDUOUS SHADE TREES, THREE (3) INCHES IN CALIPER AT PLANTING WITH A MATURE HEIGHT OF AT LEAST THIRTY–FIVE (35) FEET. B. UNDERSTORY TREES SHALL BE DECIDUOUS SHADE OR FRUIT TREES, TWO (2) INCHES IN CALIPER AT PLANTING WITH A MATURE HEIGHT OF AT LEAST TWELVE (12) FEET. C. EVERGREENS SHALL BE CONIFEROUS SPECIES, SIX (6) FEET IN HEIGHT AT PLANTING D. SHRUBS SHALL BE EITHER DECIDUOUS SPECIES TWO AND ONE HALF (2 ½) FEET IN HEIGHT AT PLANTING WITH A MATURE HEIGHT OF AT LEAST SIX (6) FEET OR CONIFEROUS SPECIES TWO AND ONE HALF (2 ½) FEET IN SPREAD.	BUFFER PLANTINGS NOT REQUIRED PER ZONING REGULATIONS, HOWEVER ALL FRONTAGE PLANTINGS ARE DESIGNED TO COMPLY AS NOTED BELOW: A. SHADE TREES ARE SPECIFIED AT 3 INCH CALIPER MIN. AT TIME OF PLANTING WITH AN ANTICIPATED HEIGHT OF THIRTY–FIVE (35) FEET AT TIME OF MATURITY. B. UNDERSTORY TREES ARE SPECIFIED TO BE TWO (2) INCH CALIPER MIN. AT TIME OF PLANTING WITH AN ANTICIPATED HEIGHT OF TWELVE (12) FEET AT TIME OF MATURITY. C. CONIFEROUS EVERGREENS ARE SPECIFIED AT SIX (6) FEET HEIGHT MIN. AT TIME OF PLANTING. D. DECIDUOUS SHRUBS ARE SPECIFIED AT TWO AND ONE HALF (2 ½) FEET HEIGHT AND CONIFEROUS SHRUBS AT TWO AND ONE HALF (2 ½) FEET SPREAD AT TIME OF PLANTING.	COMPLIES
6.1.E.3.a.	PLANTING MATERIALS USED FOR LANDSCAPING AND SCREENING SHALL BE APPROPRIATE FOR CONNECTICUT; NATIVE SPECIES ARE PREFERRED.	ALL PLANTING MATERIAL NOTED IN PLANTING SCHEDULE ARE NATIVE SPECIES TO CONNECTICUT	COMPLIES

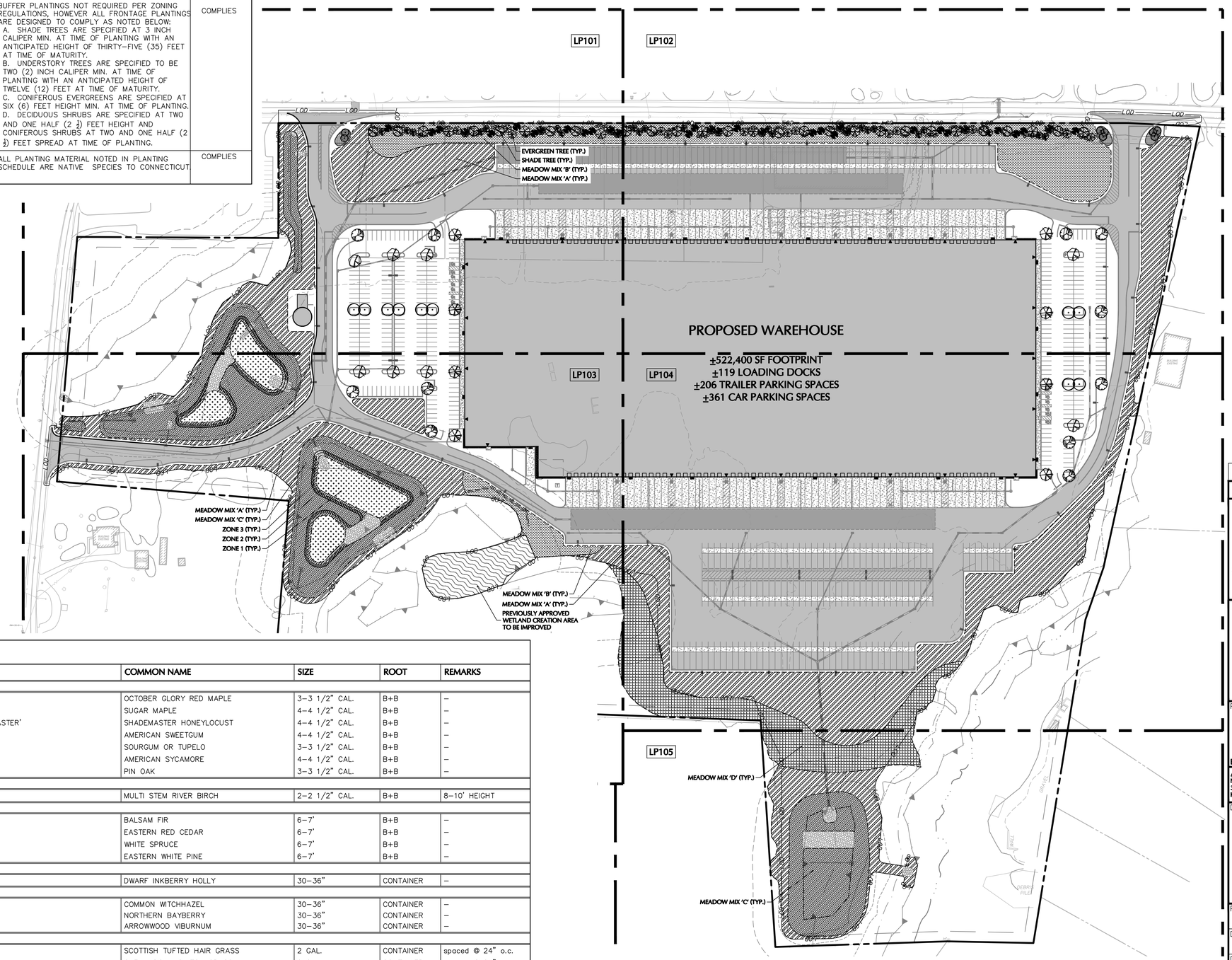

CT NAD 83

SHEET LEGEND

1" = 1,000'

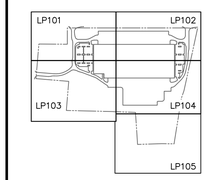

PLANT SCHEDULE

KEY	QTY.	BOTANICAL NAME	COMMON NAME	SIZE	ROOT	REMARKS
SHADE TREE(S)						
AROG	9	ACER RUBRUM 'OCTOBER GLORY'	OCTOBER GLORY RED MAPLE	3–3 1/2" CAL.	B+B	–
AS	11	ACER SACCHARUM	SUGAR MAPLE	4–4 1/2" CAL.	B+B	–
GTIS	8	GLEDITSIA TRIACANTHOS VAR. INERMIS 'SHADEMASTER'	SHADEMASTER HONEYLOCUST	4–4 1/2" CAL.	B+B	–
LST	8	LIQUIDAMBAR STYRACIFLUA	AMERICAN SWEETGUM	4–4 1/2" CAL.	B+B	–
NS	12	NYSSA SYLVATICA	SOURGUM OR TUPELO	3–3 1/2" CAL.	B+B	–
PLO	10	PLATANUS OCCIDENTALIS	AMERICAN SYCAMORE	4–4 1/2" CAL.	B+B	–
QP	8	QUERCUS PALUSTRIS	PIN OAK	3–3 1/2" CAL.	B+B	–
ORNAMENTAL TREE(S)						
BN	8	BETULA NIGRA	MULTI STEM RIVER BIRCH	2–2 1/2" CAL.	B+B	8–10' HEIGHT
EVERGREEN TREE(S)						
ABS	11	ABIES BALSAMAEA	BALSAM FIR	6–7'	B+B	–
JV	21	JUNIPERUS VIRGINIANA	EASTERN RED CEDAR	6–7'	B+B	–
PGL	22	PICEA GLAUCA	WHITE SPRUCE	6–7'	B+B	–
PS	13	PINUS STROBUS	EASTERN WHITE PINE	6–7'	B+B	–
EVERGREEN SHRUB(S)						
IGC	50	ILEX GLABRA COMPACTA	DWARF INKBERRY HOLLY	30–36"	CONTAINER	–
DECIDUOUS SHRUB(S)						
HVCW	31	HAMAMELIS VIRGINIANA	COMMON WITCHHAZEL	30–36"	CONTAINER	–
MP	26	MYRICA PENSYLVANICA	NORTHERN BAYBERRY	30–36"	CONTAINER	–
VD	24	VIBURNUM DENTATUM	ARROWWOOD VIBURNUM	30–36"	CONTAINER	–
ORNAMENTAL GRASS(ES)						
DCS	332	DESCHAMPSIA CESPITOSA 'SCHOTTLAND'	SCOTTISH TUFTED HAIR GRASS	2 GAL.	CONTAINER	spaced @ 24" o.c.
PVS	231	PANICUM VIRGATUM 'SHENANDOAH'	SHENANDOAH SWITCH GRASS	2 GAL.	CONTAINER	spaced @ 24" o.c.

NOTE: IF ANY DISCREPANCIES OCCUR BETWEEN AMOUNTS SHOWN IN THE PLAN AND THE PLANT LIST, THE PLAN SHALL DICTATE.

FOR PERMITTING ONLY, NOT FOR CONSTRUCTION

Date	Description	No.

Revisions

STATE OF CONNECTICUT MICHAEL SZURA 1339

Signature Date

MICHAEL SZURA
LICENSED LANDSCAPE ARCHITECT
STATE LIC. No. 1339

LANGAN
Langan Engineering and Environmental Services, Inc.
555 Long Wharf Drive
New Haven, CT 06511
T: 203.562.5771 F: 203.789.6142 www.langan.com

Project
NORTH BLOOMFIELD COMMERCE CENTER
116 WEST DUDLEY TOWN ROAD
MAP 16, LOT 43
BLOOMFIELD CONNECTICUT

APPLICANT/DEVELOPER:
NORTHPOINT DEVELOPMENT
3315 NORTH OAK TRAFFICWAY
KANSAS CITY, MO 64116

SUBMISSION PURPOSE: INLAND WETLANDS AND WATERCOURSES COMMISSION PERMIT APPLICATION

Drawing Title
OVERALL PLANTING PLAN

Project No. 140255601
Date 12/08/2022
Drawn By AC
Checked By JA
Drawing No. LP100

LANGAN
Project No. 140255601

©2022 Langan

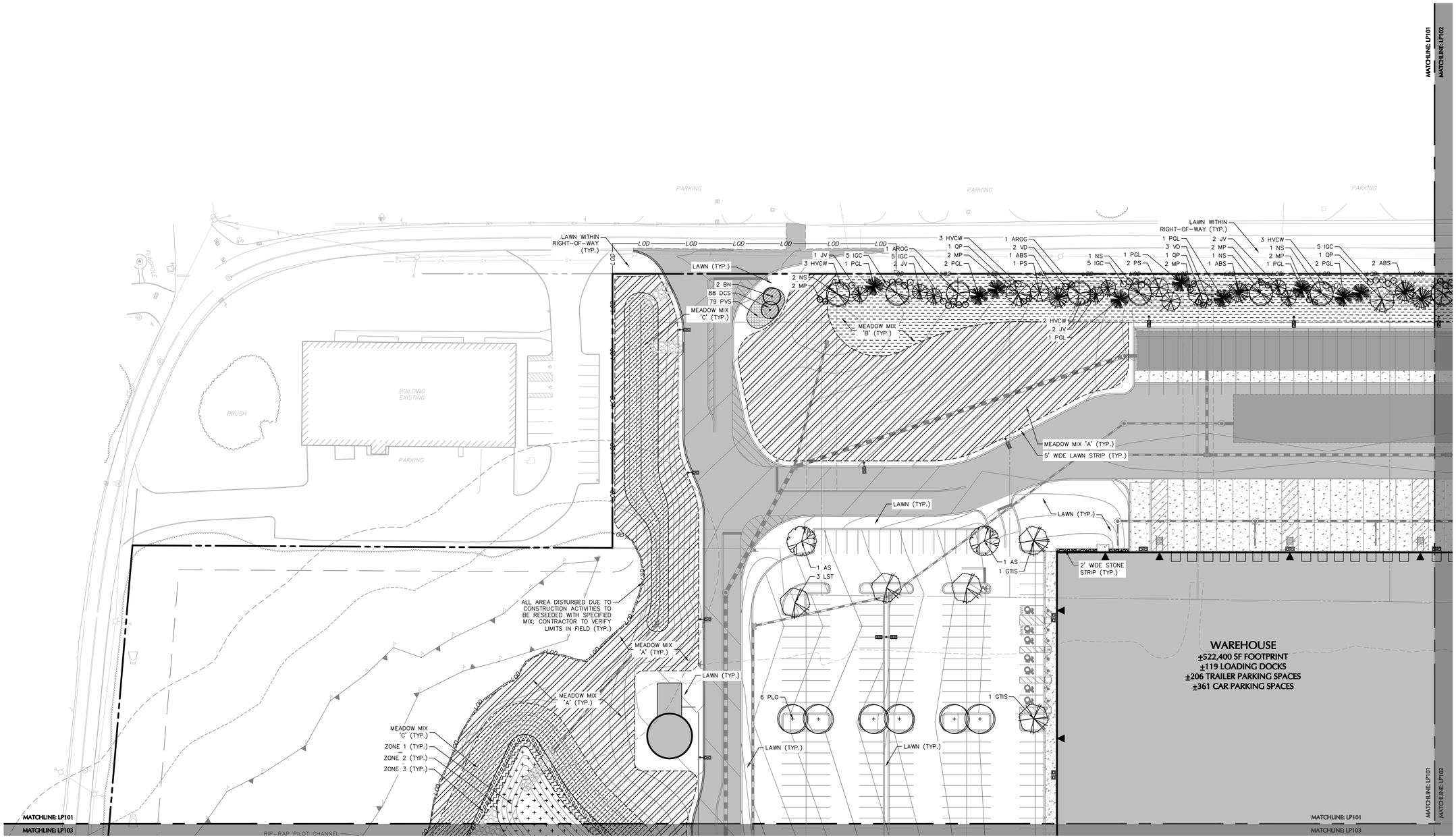

SHEET LEGEND

1" = 1,000'

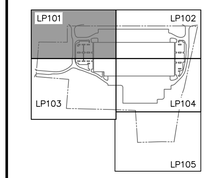

Date	Description	No.

Revisions

Signature — MICHAEL SZURA, LICENSED LANDSCAPE ARCHITECT, STATE LIC. No. 1339 — Date

LANGAN
Langan Engineering and Environmental Services, Inc.
555 Long Wharf Drive
New Haven, CT 06511
T: 203.562.5771 F: 203.789.6142 www.langan.com

Project

NORTH BLOOMFIELD COMMERCE CENTER

116 WEST DUDLEY TOWN ROAD
MAP 16, LOT 43

BLOOMFIELD CONNECTICUT

APPLICANT/DEVELOPER:
NORTHPOINT DEVELOPMENT
3315 NORTH OAK TRAFFICWAY
KANSAS CITY, MO 64116

SUBMISSION PURPOSE: INLAND WETLANDS AND WATERCOURSES COMMISSION PERMIT APPLICATION

Drawing Title

PLANTING PLAN I

Project No.	Drawing No.
140255601	LP101
Date: 12/08/2022	
Drawn By: AC	
Checked By: JA	

REFER TO SHEET LP100 FOR PLANTING SCHEDULE

FOR PERMITTING ONLY, NOT FOR CONSTRUCTION

40 0 10 25 40
SCALE: 1 INCH = 40 FEET

Project No. 140255601

LANGAN

© 2022 Langan

Date: 12/8/2022 Time: 09:35 User: acassella Style Table: Langan.stb Layout: LP101 Document Code: 140255601-0501-LP101-0102

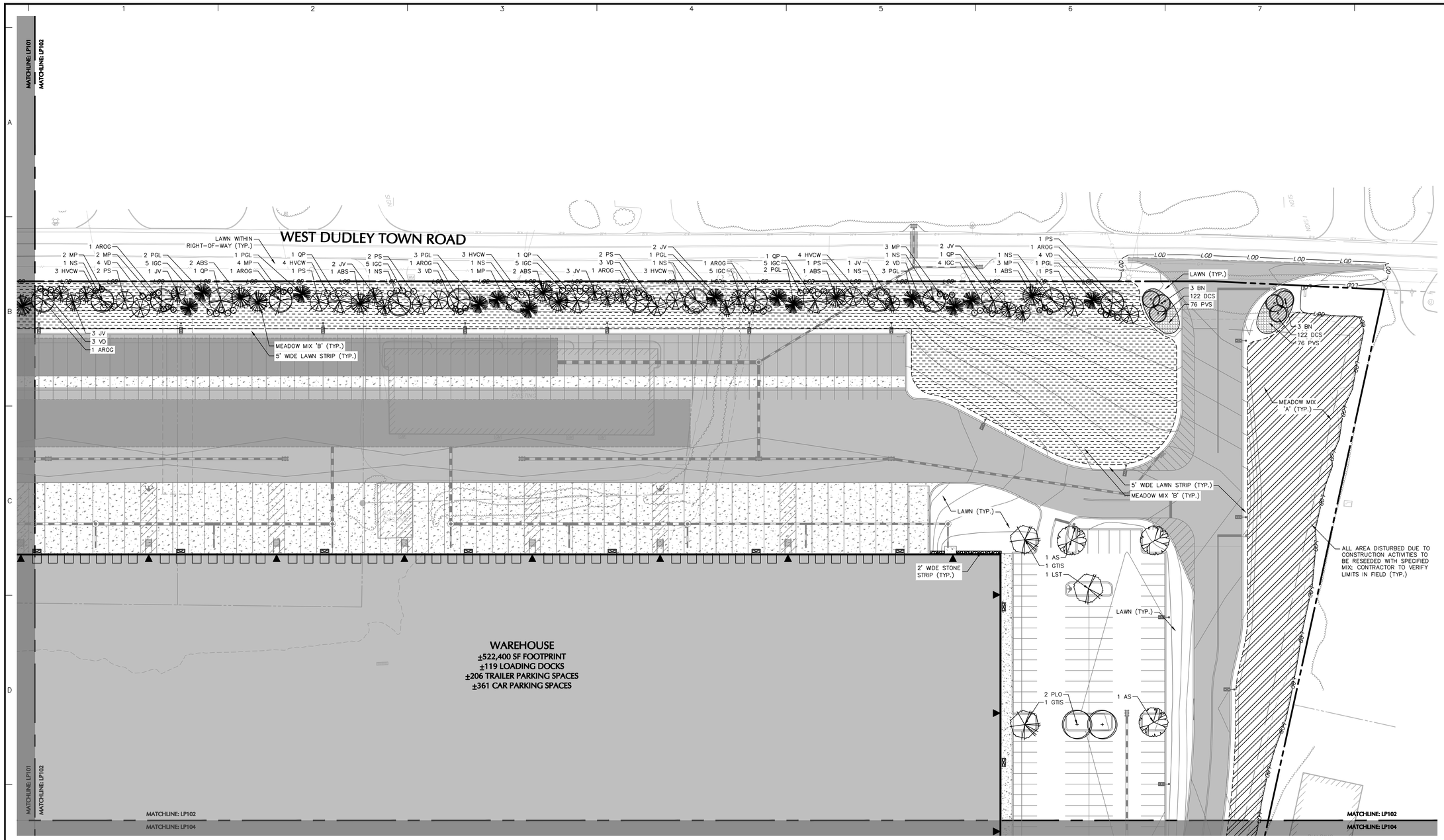

CT NAD 83

SHEET LEGEND

1" = 1,000'

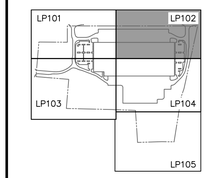

Date	Description	No.

Revisions

Signature — MICHAEL SZURA, LICENSED LANDSCAPE ARCHITECT, STATE LIC. No. 1339 — Date

LANGAN
Langan Engineering and Environmental Services, Inc.
555 Long Wharf Drive
New Haven, CT 06511
T: 203.562.5771 F: 203.789.6142 www.langan.com

Project
NORTH BLOOMFIELD COMMERCE CENTER
116 WEST DUDLEY TOWN ROAD
MAP 16, LOT 43
BLOOMFIELD CONNECTICUT

APPLICANT/DEVELOPER:
NORTHPOINT DEVELOPMENT
3315 NORTH OAK TRAFFICWAY
KANSAS CITY, MO 64116

SUBMISSION PURPOSE: INLAND WETLANDS AND WATERCOURSES COMMISSION PERMIT APPLICATION

Drawing Title
PLANTING PLAN II

Project No.	Drawing No.
140255601	LP102
Date: 12/08/2022	
Drawn By: AC	
Checked By: JA	

REFER TO SHEET LP100 FOR PLANTING SCHEDULE

FOR PERMITTING ONLY, NOT FOR CONSTRUCTION

40 0 10 25 40
SCALE: 1 INCH = 40 FEET

LANGAN

Project No. 140255601

© 2022 Langan

MATCHLINE: LP101
MATCHLINE: LP103

MEADOW MIX 'C' (TYP.)
ZONE 1 (TYP.)
ZONE 2 (TYP.)
ZONE 3 (TYP.)

MEADOW MIX 'C' (TYP.)

MEADOW MIX 'A' (TYP.)

3 LST
2 AS

5' WIDE LAWN STRIP (TYP.)

1 GTIS

MEADOW MIX 'A' (TYP.)

1 AS
1 GTIS

WAREHOUSE
±522,400 SF FOOTPRINT
±119 LOADING DOCKS
±206 TRAILER PARKING SPACES
±361 CAR PARKING SPACES

2' WIDE STONE STRIP (TYP.)

LAWN (TYP.)

5' WIDE LAWN STRIP (TYP.)

ALL AREA DISTURBED DUE TO CONSTRUCTION ACTIVITIES TO BE RESEEDED WITH SPECIFIED MIX; CONTRACTOR TO VERIFY LIMITS IN FIELD (TYP.)

MEADOW MIX 'A' (TYP.)

MEADOW MIX 'C' (TYP.)
ZONE 3 (TYP.)
ZONE 2 (TYP.)
ZONE 1 (TYP.)

MEADOW MIX 'B' (TYP.)

5' WIDE LAWN STRIP (TYP.)

PREVIOUSLY APPROVED WETLAND CREATION AREA TO BE IMPROVED, SEE LP502 FOR 'WETLAND CREATION AREA PLANTING SCHEDULE'

MEADOW MIX 'D' (TYP.)

BUILDING EXISTING

BUILDING EXISTING

BUILDING EXISTING

BUILDING EXISTING

MATCHLINE: LP101
MATCHLINE: LP102
MATCHLINE: LP103
MATCHLINE: LP104
MATCHLINE: LP103
MATCHLINE: LP105

REFER TO SHEET LP100 FOR PLANTING SCHEDULE

FOR PERMITTING ONLY, NOT FOR CONSTRUCTION

40 0 10 25 40
SCALE: 1 INCH = 40 FEET

CT NAD 83

SHEET LEGEND
1" = 1,000'

LP101 LP102 LP103 LP104 LP105

Date	Description	No.

Revisions

STATE OF CONNECTICUT MICHAEL SZURA

Signature Date

MICHAEL SZURA
LICENSED LANDSCAPE ARCHITECT
STATE LIC. No. 1339

LANGAN
Langan Engineering and Environmental Services, Inc.
555 Long Wharf Drive
New Haven, CT 06511
T: 203.562.5771 F: 203.789.6142 www.langan.com

Project
NORTH BLOOMFIELD COMMERCE CENTER
116 WEST DUDLEY TOWN ROAD
MAP 16, LOT 43
BLOOMFIELD CONNECTICUT

APPLICANT/DEVELOPER:
NORTHPOINT DEVELOPMENT
3315 NORTH OAK TRAFFICWAY
KANSAS CITY, MO 64116

SUBMISSION PURPOSE: INLAND WETLANDS AND WATERCOURSES COMMISSION PERMIT APPLICATION

Drawing Title
PLANTING PLAN III

Project No.	Drawing No.
140255601	LP103
Date 12/08/2022	
Drawn By AC	
Checked By JA	

LANGAN

Project No. 140255601

© 2022 Langan

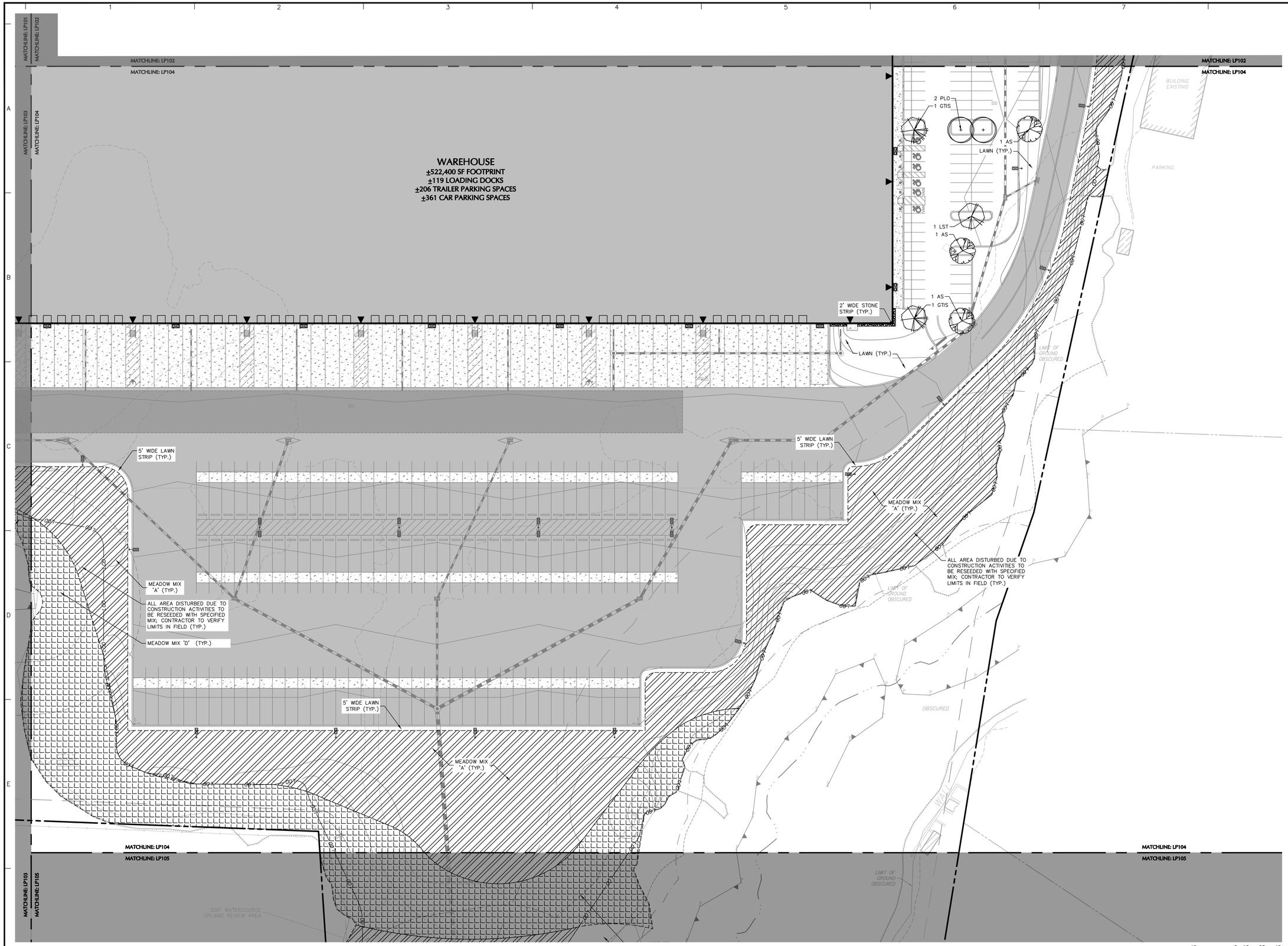

SHEET LEGEND

1" = 1,000'

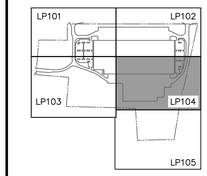

REFER TO SHEET LP100 FOR PLANTING SCHEDULE

FOR PERMITTING ONLY, NOT FOR CONSTRUCTION

40 0 10 25 40
SCALE: 1 INCH = 40 FEET

Date	Description	No.

Revisions

Signature — MICHAEL SZURA, LICENSED LANDSCAPE ARCHITECT, STATE LIC. No. 1339 — Date

LANGAN
Langan Engineering and Environmental Services, Inc.
555 Long Wharf Drive
New Haven, CT 06511
T: 203.562.5771 F: 203.789.6142 www.langan.com

Project
NORTH BLOOMFIELD COMMERCE CENTER
116 WEST DUDLEY TOWN ROAD
MAP 16, LOT 43
BLOOMFIELD CONNECTICUT

APPLICANT/DEVELOPER:
NORTHPOINT DEVELOPMENT
3315 NORTH OAK TRAFFICWAY
KANSAS CITY, MO 64116

SUBMISSION PURPOSE: INLAND WETLANDS AND WATERCOURSES COMMISSION PERMIT APPLICATION

Drawing Title
PLANTING PLAN IV

Project No. 140255601
Date 12/08/2022
Drawn By AC
Checked By JA
Drawing No. LP104

LANGAN
Project No. 140255601

© 2022 Langan

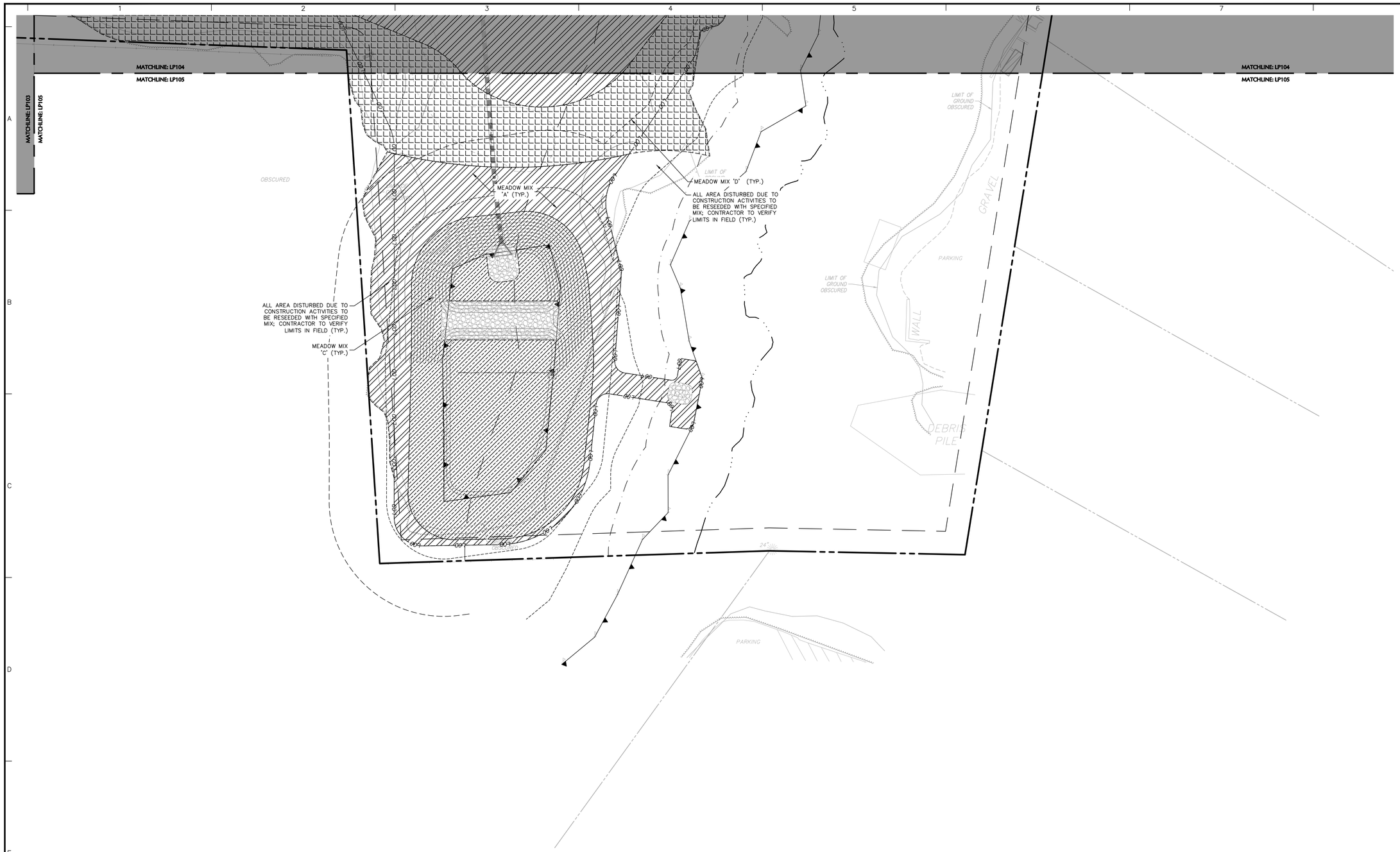

CT NAD 83

SHEET LEGEND

1" = 1,000'

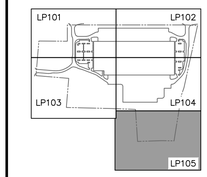

REFER TO SHEET LP100 FOR PLANTING SCHEDULE

FOR PERMITTING ONLY, NOT FOR CONSTRUCTION

40 0 10 25 40
SCALE: 1 INCH = 40 FEET

Date	Description	No.

Revisions

STATE OF CONNECTICUT MICHAEL SZURA

Signature MICHAEL SZURA Date
LICENSED LANDSCAPE ARCHITECT
STATE LIC. No. 1339

LANGAN
Langan Engineering and Environmental Services, Inc.
555 Long Wharf Drive
New Haven, CT 06511
T: 203.562.5771 F: 203.789.6142 www.langan.com

Project
NORTH BLOOMFIELD COMMERCE CENTER
116 WEST DUDLEY TOWN ROAD
MAP 16, LOT 43
BLOOMFIELD CONNECTICUT

APPLICANT/DEVELOPER:
NORTHPOINT DEVELOPMENT
3315 NORTH OAK TRAFFICWAY
KANSAS CITY, MO 64116

SUBMISSION PURPOSE: INLAND WETLANDS AND WATERCOURSES COMMISSION PERMIT APPLICATION

Drawing Title
PLANTING PLAN V

Project No. 140255601
Date 12/08/2022
Drawn By AC
Checked By JA

Drawing No. LP105

LANGAN
Project No. 140255601

© 2022 Langan

GENERAL LANDSCAPE PLANTING NOTES

1. NAMES OF PLANTS AS DESCRIBED ON THIS PLAN CONFORM TO THOSE GIVEN IN "STANDARDIZED PLANT NAMES", 1942 EDITION, PREPARED BY THE AMERICAN JOINT COMMITTEE ON HORTICULTURAL NOMENCLATURE. NAMES OF PLANT VARIETIES NOT INCLUDED THEREIN CONFORM TO NAMES GENERALLY ACCEPTED IN NURSERY TRADE.
2. ALL EXPOSED GROUND SURFACES THAT ARE NOT PAVED WITHIN THE CONTRACT LIMIT LINE, AND THAT ARE NOT COVERED BY LANDSCAPE PLANTING OR SEEDING AS SPECIFIED, SHALL BE COVERED BY A NATURAL MULCH THAT WILL PREVENT SOIL EROSION AND THE EMANATION OF DUST.
3. NO PLANT SHALL BE PUT INTO THE GROUND BEFORE ROUGH GRADING HAS BEEN COMPLETED AND APPROVED BY THE PROJECT LANDSCAPE ARCHITECT OR PROJECT ENGINEER.
4. STANDARDS FOR TYPE, SPREAD, HEIGHT, ROOT BALL AND QUALITY OF NEW PLANT MATERIAL SHALL BE IN ACCORDANCE WITH GUIDELINES AS SET FORTH IN THE "AMERICAN STANDARD FOR NURSERY STOCK", PUBLISHED BY THE AMERICAN ASSOCIATION OF NURSERYMEN. PLANT MATERIAL SHALL HAVE NORMAL HABIT OF GROWTH AND BE HEALTHY, VIGOROUS, AND FREE FROM DISEASES AND INSECT INFESTATION.
5. NEW PLANT MATERIAL SHALL BE NURSERY GROWN UNLESS SPECIFIED OTHERWISE. ALL PLANTS SHALL BE SET PLUMB AND SHALL BEAR THE SAME RELATIONSHIP TO FINISHED GRADE AS THE PLANT'S ORIGINAL GRADE BEFORE DIGGING. PLANT MATERIAL OF THE SAME SPECIES AND SPECIFIED AS THE SAME SIZE SHOULD BE SIMILAR IN SHAPE, COLOR AND HABIT. THE LANDSCAPE ARCHITECT HAS THE RIGHT TO REJECT PLANT MATERIAL THAT DOES NOT CONFORM TO THE TYPICAL OR SPECIFIED HABIT OF THAT SPECIES.
6. THE CONTRACTOR SHALL VERIFY THE LOCATION OF ALL EXISTING UNDERGROUND UTILITY AND SEWER LINES PRIOR TO THE START OF EXCAVATION ACTIVITIES. NOTIFY THE PROJECT ENGINEER AND OWNER IMMEDIATELY OF ANY CONFLICTS WITH PROPOSED PLANTING LOCATIONS. THE CONTRACTOR SHALL BE RESPONSIBLE FOR ANY DAMAGE.
7. THE CONTRACTOR SHALL NOT MAKE SUBSTITUTIONS. IF THE SPECIFIED LANDSCAPE MATERIAL IS NOT OBTAINABLE, THE CONTRACTOR SHALL SUBMIT PROOF OF NON-AVAILABILITY TO THE LANDSCAPE ARCHITECT AND OWNER, TOGETHER WITH A WRITTEN PROPOSAL FOR USE OF AN EQUIVALENT MATERIAL.
8. LANDSCAPE CONTRACTOR TO STAKE OUT PLANTING LOCATIONS, FOR REVIEW AND APPROVAL BY THE LANDSCAPE ARCHITECT AND/OR OWNER BEFORE PLANTING WORK BEGINS. THE LANDSCAPE ARCHITECT AND/OR OWNER SHALL DIRECT THE CONTRACTOR IN THE FINAL PLACEMENT OF ALL PLANT MATERIAL AND LOCATION OF PLANTING BEDS TO ENSURE COMPLIANCE WITH DESIGN INTENT UNLESS OTHERWISE INSTRUCTED.
9. THE LANDSCAPE ARCHITECT MAY REVIEW PLANT MATERIALS AT THE SITE, BEFORE PLANTING, FOR COMPLIANCE WITH REQUIREMENTS FOR GENUS, SPECIES, VARIETY, SIZE, AND QUALITY. THE LANDSCAPE ARCHITECT RETAINS THE RIGHT TO FURTHER REVIEW PLANT MATERIALS FOR SIZE AND CONDITION OF BALLS AND ROOT SYSTEM, INSECTS, INJURIES, AND LATENT DEFECTS, AND TO REJECT UNSATISFACTORY OR DEFECTIVE MATERIAL AT ANY TIME DURING PROGRESS OF WORK. THE CONTRACTOR SHALL REMOVE REJECTED PLANT MATERIALS IMMEDIATELY FROM PROJECT SITE AS DIRECTED BY THE LANDSCAPE ARCHITECT OR OWNER.
10. DELIVERY, STORAGE, AND HANDLING
    A. PACKAGED MATERIALS: PACKAGED MATERIALS SHALL BE DELIVERED IN CONTAINERS SHOWING WEIGHT, ANALYSIS, AND NAME OF MANUFACTURER. MATERIALS SHALL BE PROTECTED FROM DETERIORATION DURING DELIVERY, AND WHILE STORED AT SITE.
    B. TREES AND SHRUBS: THE CONTRACTOR SHALL PROVIDE TREES AND SHRUBS DUG FOR THE GROWING SEASON FOR WHICH THEY WILL BE PLANTED. DO NOT PRUNE PRIOR TO DELIVERY UNLESS OTHERWISE DIRECTED BY THE LANDSCAPE ARCHITECT. DO NOT BEND OR BIND-TIE TREES OR SHRUBS IN SUCH A MANNER AS TO DAMAGE BARK, BREAK BRANCHES, OR DESTROY NATURAL SHAPE. PROVIDE PROTECTIVE COVERING DURING TRANSIT. DO NOT DROP BALLED AND BURLAPPED STOCK DURING DELIVERY OR HANDLING.
    C. ALL PLANTS SHALL BE BALLED AND BURLAPPED OR CONTAINER GROWN AS SPECIFIED. NO CONTAINER GROWN STOCK WILL BE ACCEPTED IF IT IS ROOT BOUND. ALL ROOTBALL WRAPPING AND BINDING MATERIAL MADE OF SYNTHETICS OR PLASTICS SHALL BE REMOVED FROM THE TOP OF THE BALL AT THE TIME OF PLANTING. IF THE PLANT IS SHIPPED WITH A WIRE BASKET AROUND THE ROOT BALL, THE WIRE BASKET SHALL BE CUT AND FOLDED DOWN 8 INCHES INTO THE PLANTING HOLE. WITH CONTAINER GROWN STOCK, THE CONTAINER SHALL BE REMOVED AND THE ROOT BALL SHALL BE CUT THROUGH THE SURFACE IN TWO LOCATIONS.
    D. THE CONTRACTOR SHALL HAVE TREES AND SHRUBS DELIVERED TO SITE AFTER PREPARATIONS FOR PLANTING HAVE BEEN COMPLETED AND PLANT IMMEDIATELY. IF PLANTING IS DELAYED MORE THAN 6 HOURS AFTER DELIVERY, THE CONTRACTOR SHALL SET TREES AND SHRUBS IN SHADE, PROTECT FROM WEATHER AND MECHANICAL DAMAGE AND KEEP ROOTS MOIST BY COVERING WITH MULCH, BURLAP OR OTHER ACCEPTABLE MEANS OF RETAINING MOISTURE.
11. ALL LANDSCAPED AREAS TO BE CLEARED OF ROCKS, STUMPS, TRASH AND OTHER UNSIGHTLY DEBRIS. ALL FINE GRADED AREAS SHOULD BE HAND RAKED SMOOTH ELIMINATING ANY CLUMPS AND AND UNEVEN SURFACES PRIOR TO PLANTING OR MULCHING.
12. ALL PLANT MATERIAL SHALL BE INSTALLED AS PER DETAILS, NOTES AND CONTRACT SPECIFICATIONS. THE LANDSCAPE ARCHITECT MAY REVIEW INSTALLATION AND MAINTENANCE PROCEDURES.
13. NEW PLANT MATERIAL SHALL BE GUARANTEED TO BE ALIVE AND IN VIGOROUS GROWING CONDITION FOR A PERIOD OF TWO YEARS FOLLOWING ACCEPTANCE BY THE OWNER. PLANT MATERIAL FOUND TO BE UNHEALTHY, DYING OR DEAD DURING THIS PERIOD, SHALL BE REMOVED AND REPLACED IN KIND BY THE CONTRACTOR AT NO EXPENSE TO THE OWNER.
14. THE CONTRACTOR SHALL KEEP AREA CLEAN DURING DELIVERY AND INSTALLATION OF PLANT MATERIALS. REMOVE AND DISPOSE OF OFF-SITE ANY ACCUMULATED DEBRIS OR UNUSED MATERIALS. REPAIR DAMAGE TO ADJACENT AREAS CAUSED BY LANDSCAPE INSTALLATION OPERATIONS.
15. ALL PLANTS SHALL BE WATERED THOROUGHLY TWCE DURING THE FIRST 24-HOUR PERIOD AFTER PLANTING. ALL PLANTS SHALL THEN BE WATERED WEEKLY OR AS REQUIRED BY SITE AND WEATHER CONDITIONS TO MAINTAIN VIGOROUS AND HEALTHY PLANT GROWTH.
16. THE BACKFILL MIXTURE AND SOIL MIXES TO BE INSTALLED PER THE SPECIFICATIONS.
17. AFTER PLANT IS PLACED IN TREE PIT LOCATION, ALL TWINE HOLDING ROOT BALL TOGETHER SHOULD BE COMPLETELY REMOVED AND THE BURLAP SHOULD BE PULLED DOWN SO 1/3 OF THE ROOT BALL IS EXPOSED. SYNTHETIC BURLAP SHOULD BE COMPLETELY REMOVED AFTER INSTALLATION.
18. MULCH SHOULD NOT BE PILED UP AROUND THE TRUNK OF ANY PLANT MATERIAL. NO MULCH OR TOPSOIL SHOULD BE TOUCHING THE BASE OF THE TRUNK ABOVE THE ROOT COLLAR. ALL MULCH TO BE DOUBLE SHREDDED HARDWOOD BARK.
19. ALL FENCE INSTALLATION SHALL BE COMPLETED PRIOR TO COMMENCEMENT OF ANY LANDSCAPE PLANTING, LAWN AND GRASSES, OR IRRIGATION WORK.
20. FOR ANY DISCREPANCIES BETWEEN THE PLANT SCHEDULE AND PLANTING PLAN THE GRAPHIC QUANTITY SHOWN SHALL GOVERN.
21. PLANT MATERIALS SHALL NOT BE PLANTED UNTIL THE FINISHED GRADING HAS BEEN COMPLETED.
22. ALL PLANT INSTALLATIONS SHALL BE COMPLETED EITHER BETWEEN APRIL 1 – JUNE 15 OR AUGUST 15 – NOVEMBER 1, UNLESS OTHERWISE DIRECTED BY THE PROJECT LANDSCAPE ARCHITECT. SEE LAWN SEEDING DATES IN SEEDING NOTES.

LANDSCAPE MAINTENANCE NOTES

1. MAINTENANCE OPERATIONS BEFORE APPROVAL:
   A. PLANT CARE SHALL BEGIN IMMEDIATELY AFTER EACH PLANT IS SATISFACTORILY INSTALLED AND SHALL CONTINUE THROUGHOUT THE LIFE OF THE CONTRACT UNTIL FINAL ACCEPTANCE OF THE PROJECT.
   B. CARE SHALL INCLUDE, BUT NOT BE LIMITED TO, REPLACING MULCH THAT HAS BEEN DISPLACED BY EROSION OR OTHER MEANS, REPAIRING AND RESHAPING WATER RINGS OR SAUCERS, MAINTAINING STAKES AND GUYS AS ORIGINALLY INSTALLED, WATERING WHEN NEEDED OR DIRECTED, AND PERFORMING ANY OTHER WORK REQUIRED TO KEEP THE PLANTS IN A HEALTHY CONDITION.
   C. CONTRACTOR SHALL REMOVE AND REPLACE ALL DEAD, DEFECTIVE AND/OR REJECTED PLANTS AS REQUIRED BEFORE FINAL ACCEPTANCE.
2. MAINTENANCE DURING CONSTRUCTION:
   A. MAINTENANCE SHALL BEGIN IMMEDIATELY AFTER PLANTING. PLANTS SHALL BE WATERED, MULCHED, WEEDED, PRUNED, SPRAYED, FERTILIZED, CULTIVATED, AND OTHERWISE MAINTAINED AND PROTECTED UNTIL PROVISIONAL ACCEPTANCE. SETTLED PLANTS SHALL BE RESET TO PROPER GRADE AND POSITION, PLANTING SAUCER RESTORED AND DEAD MATERIAL REMOVED. STAKES AND WIRES SHALL BE TIGHTENED AND REPAIRED. DEFECTIVE WORK SHALL BE CORRECTED AS SOON AS POSSIBLE AFTER IT BECOMES APPARENT AND WEATHER AND SEASON PERMIT.
   B. IF A SUBSTANTIAL NUMBER OF PLANTS ARE SICKLY OR DEAD AT THE TIME OF INSPECTION, ACCEPTANCE SHALL NOT BE GRANTED AND THE CONTRACTOR'S RESPONSIBILITY FOR MAINTENANCE OF ALL PLANTS SHALL BE EXTENDED FROM THE TIME REPLACEMENTS ARE MADE OR EXISTING PLANTS ARE DEEMED ACCEPTABLE BY THE LANDSCAPE ARCHITECT.
   C. ALL REPLACEMENTS SHALL BE PLANTS OF THE SAME KIND AND SIZE SPECIFIED ON THE PLANT LIST OR THAT WHICH WAS TO REMAIN OR BE RELOCATED. THEY SHALL BE FURNISHED AND PLANTED AS SPECIFIED. THE COST SHALL BE BORNE BY THE CONTRACTOR. REPLACEMENTS RESULTING FROM REMOVAL, LOSS, OR DAMAGE DUE TO OCCUPANCY OF THE PROJECT IN ANY PART, VANDALISM, PHYSICAL DAMAGE BY ANIMALS, VEHICLES, ETC., AND LOSSES DUE TO CURTAILMENT OF WATER BY LOCAL AUTHORITIES SHALL BE APPROVED AND PAID FOR BY THE OWNER.
   D. PLANTS SHALL BE GUARANTEED FOR A PERIOD OF ONE YEAR AFTER INSPECTION AND PROVISIONAL ACCEPTANCE.
   E. AT THE END OF THE ESTABLISHMENT PERIOD, INSPECTION SHALL BE MADE AGAIN. ANY PLANT REQUIRED UNDER THIS CONTRACT THAT IS DEAD OR UNSATISFACTORY TO THE LANDSCAPE ARCHITECT OR OWNER SHALL BE REMOVED FROM THE SITE AND REPLACED DURING THE NORMAL PLANTING SEASON.
3. LAWN MAINTENANCE:
   A. BEGIN MAINTENANCE IMMEDIATELY AFTER EACH PORTION OF LAWN IS PLANTED AND CONTINUE FOR 8 WEEKS AFTER ALL LAWN PLANTING IS COMPLETED.
   B. WATER TO KEEP SURFACE SOIL MOIST, REPAIR WASHED OUT AREAS BY FILLING WITH TOPSOIL, LIMING, FERTILIZING AND RE-SEEDING; MOW TO 2 1/2 – 3 INCHES AFTER GRASS REACHES 3 1/2 INCHES IN HEIGHT, AND MOW FREQUENTLY ENOUGH TO KEEP GRASS FROM EXCEEDING 3 1/2 INCHES. WEED BY LOCAL SPOT APPLICATION OF SELECTIVE HERBICIDE ONLY AFTER GRASS IS WELL-ESTABLISHED.

LAWN WATERING SCHEDULE

THE FOLLOWING WATERING SCHEDULE COVERS ROUGHLY 8 WEEKS TO ESTABLISH A HEALTHY STAND OF GRASS FROM SEED. THE CONTRACTOR SHALL BE OBLIGATED TO ENSURE A HEALTHY STAND OF GRASS AT THE END OF THE MAINTENANCE/BOND PERIOD. ANY BARE OR DEAD AREAS IN THE LAWN SHALL BE PREPARED, RESEEDED AND REESTABLISHED PRIOR TO THE END OF THE MAINTENANCE/BOND PERIOD AND TO THE SATISFACTION OF THE PROJECT LANDSCAPE ARCHITECT AND THE OWNER.

IMPORTANT ASPECTS TO ATTAINING AND SUSTAINING A HEALTHY STAND OF GRASS ARE THE INSTALLATION OF TOPSOIL, SEED BED PREPARATION, ATTAINING OPTIMAL pH FOR THE INTENDED PLANT SPECIES, FERTILIZING, MULCH COVERING, AND SUFFICIENT WATERING PER THESE NOTES AND/OR PROJECT SPECIFICATIONS.

1. SEEDING SHALL BE DONE DURING THE SEASONS SPECIFIED IN THE LAWN SEED MIX NOTES AND/OR PROJECT SPECIFICATIONS.
2. AFTER THE SEEDBED IS PREPARED, SEED IS INSTALLED, AND MULCH IS APPLIED, WATER LIGHTLY TO KEEP THE TOP 2 INCHES OF SOIL CONSISTENTLY MOIST, NOT SATURATED. AT NO TIME SHOULD WATER BE APPLIED TO THE POINT OF RUNOFF OR THE DISPLACEMENT OF SEED.
3. DEPENDING ON SOIL TEMPERATURES, IT MAY TAKE SEVERAL WEEKS FOR GERMINATION TO OCCUR. DIFFERENT SPECIES WITHIN THE MIX GERMINATE AT DIFFERENT TIMES AND THEREFORE CONTRACTOR SHOULD CONTINUE THE LIGHT WATERING, AS DESCRIBED ABOVE, UNTIL THERE IS AT LEAST 2 INCHES OF GROWTH THROUGHOUT.
4. AT THIS POINT, WATERING FREQUENCY MAY BE REDUCED TO EVERY 3 TO 5 DAYS. WATER SHALL BE APPLIED TO WET A 6 INCH MINIMUM SOIL DEPTH TO PROMOTE HEALTHY DEEP ROOTS.
5. BEGIN MOWING ONCE PER WEEK AFTER THE GRASS HAS REACHED 3 INCHES HEIGHT. MOW TO A HEIGHT OF NO LESS THAN 2–½ INCHES. AFTER 2 TO 3 WEEKS OF MOWING, CONTINUE TO WATER TO A 6 INCH MINIMUM SOIL DEPTH AS NECESSARY PER WEATHER CONDITIONS, AND SOIL MOISTURE SENSORS IF APPLICABLE.

PLANTING SOIL SPECIFICATIONS

1. PLANTING SOIL, ALTERNATELY MAY BE REFERRED TO AS TOPSOIL, SHOULD BE FRIABLE, FERTILE, WELL DRAINED, FREE OF DEBRIS, TOXINS, TRASH AND STONES OVER 1/2" DIA., IT SHOULD HAVE A HIGH ORGANIC CONTENT SUITABLE TO SUSTAIN HEALTHY PLANT GROWTH AND SHOULD LOOK AESTHETICALLY PLEASING HAVING NO NOXIOUS ODORS.
2. PLANTING SOIL:

   REUSE SURFACE SOILS STOCKPILED ON SITE, VERIFYING COMPLIANCE WITH PLANTING SOIL AND TOPSOIL CRITERIA IN THIS SPECIFICATION THROUGH TESTING. CLEAN SURFACE SOIL OF ALL ROOTS, PLANTS, SOD, AND GRAVEL GREATER THAN 1" IN DIAMETER AND DELETERIOUS MATERIALS. IF ON-SITE SOILS ARE TO BE USED FOR PROPOSED PLANTING, THE CONTRACTOR SHALL DEMONSTRATE, THROUGH SOIL TESTING, THAT ON-SITE SOILS MEET THE SAME CRITERIA AS INDICATED IN NOTES PLANS AND SPECIFICATIONS.

   SUPPLEMENT WITH IMPORTED OR MANUFACTURED TOPSOIL FROM OFF SITE SOURCES WHEN TOPSOIL AND PLANTING SOIL QUANTITIES ARE INSUFFICIENT. OBTAIN SOIL DISPLACED FROM NATURALLY WELL-DRAINED SITES WHERE TOPSOIL OCCURS AT LEAST 4" DEEP. DO NOT OBTAIN FROM AGRICULTURAL LAND, BOGS, MARSHES OR CONTAMINATED SITES.

   CONTRACTOR SHALL TEST SOILS AND FURNISH SAMPLES UPON REQUEST. PACKAGED MATERIALS SHALL BE UNOPENED BAGS OR CONTAINERS, EACH BEARING A NAME, GUARANTEE, AND TRADEMARK OF THE PRODUCER, MATERIAL COMPOSITION, MANUFACTURER'S CERTIFIED ANALYSIS, AND THE WEIGHT OF THE MATERIALS. SOIL OR AMENDMENT MATERIALS SHALL BE STORED ON SITE TEMPORARILY IN STOCKPILES PRIOR TO PLACEMENT AND SHALL BE PROTECTED FROM INTRUSION OF CONTAMINANTS AND EROSION. AFTER MIXING, SOIL MATERIALS SHALL BE COVERED WITH A TARPAULIN UNTIL TIME OF ACTUAL USE.

   ALL PLANTING SOILS SHALL BE SUBMITTED FOR TESTING TO THE STATE COOPERATIVE EXTENSION SERVICE, OR APPROVED EQUAL, PRIOR TO DELIVERY TO THE SITE. CONTRACTOR SHALL FURNISH SOIL SAMPLES AND SOIL TEST RESULTS TO LANDSCAPE ARCHITECT OR OWNER AT A RATE OF ONE SAMPLE PER 500 CUBIC YARDS TO ENSURE CONSISTENCY ACROSS THE TOTAL VOLUME OF PLANTING SOIL REQUIRED. TEST RESULTS SHALL EVALUATE FOR ALL CRITERIA LISTED IN THIS SPECIFICATION. IF TESTING AGENCY DETERMINES THAT THE SOILS ARE DEFICIENT IN ANY MANNER AND MAY BE CORRECTED BY ADDING AMENDMENTS, THE CONTRACTOR SHALL FOLLOW STATED RECOMMENDATIONS FOR SOIL IMPROVEMENT AND FURNISH SUBMITTALS FOR ALL AMENDMENTS PRIOR TO DELIVERY OF SOIL TO THE PROJECT SITE.

   A. THE FOLLOWING TESTING SHOULD BE PERFORMED AND RESULTS GIVEN TO THE LANDSCAPE ARCHITECT FOR APPROVAL BEFORE INSTALLATION:
      a. PARTICLE SIZE ANALYSIS – LOAMY SAND: 60–75% SAND, 25–40% SILT, AND 5–15% CLAY.
      b. FERTILITY ANALYSIS: pH (5.5–6.5), SOLUBLE SALTS (LESS THAN 2 MMHO/CM), NITRATE, PHOSPHATE, POTASSIUM, CALCIUM AND MAGNESIUM
      c. ORGANIC MATTER CONTENT: 2.5–5% IN NATIVE SOILS; UP TO 10% IN AMENDED SOILS
      d. TOXIC SUBSTANCE ANALYSIS
      e. MATERIAL DRAINAGE RATE: 60% PASSING IN 2 MINUTES, 40% RETAINED
      f. NOT MORE THAN 1% OF MATERIAL SHALL BE RETAINED BY A #4 SIEVE
3. BASIN SOIL MIX:
      a. BASIN SOIL MIX IS TO BE USED IN ALL DETENTION BASINS.
      b. MIX TO CONSIST OF 60% COARSE SAND, 40% SUBSOIL TOPSOIL/HORTICULTURAL SOIL MIX
      c. TOPSOIL/HORTICULTURAL SOIL MIX: REFER TO SPECIFICATIONS LISTED IN SECTION ABOVE
      d. COARSE SAND:

1) PARTICLE SIZE ANALYSIS SIEVE	PERCENT PASSING
3/8 INCH (9.5 MM)	100
NO 4 (4.75 MM)	95–100
NO 8 (2.36 MM)	80–100
NO 16 (1.18 MM)	50–85
NO 30 (.60 MM)	25–60
NO 50 (.30 MM)	10–30
NO 100 (.15 MM)	2–10
NO 200 (0.75 MM	2–5

      2) CHEMICAL ANALYSIS
         PH: LOWER THAN 7.0
         TOXIC SUBSTANCE ANALYSIS
      e. FINAL BIORETENTION MIX

      1) PARTICLE SIZE ANALYSIS
         a) SAND – 80–85%
         b) SILT – 10–15%
         c) CLAY – 2–5%

         NOT MORE THAN 1% OF MATERIAL TO BE RETAINED BY A #4 SIEVE

      2) CHEMICAL ANALYSIS
         a) PH – 5.5–6.5
         b) SOLUBLE SALTS: LESS THAN 2 MMHO/CM

      3) CONTRACTOR TO SUBMIT TOXIC SUBSTANCE ANALYSIS AND MATERIAL DRAINAGE RATE IN ADDITION TO INFORMATION LISTED ABOVE. DRAINAGE RATE OF MATERIAL TO EXCEED 1 INCH/HOUR
4. SOIL AMENDMENT FOR PLANT MATERIAL:
   IF SOIL ORGANIC CONTENT IS INADEQUATE, SOIL SHALL BE AMENDED WITH COMPOST OR ACCEPTABLE, WEED FREE, ORGANIC MATTER. ORGANIC AMENDMENT SHALL BE WELL COMPOSTED, PH RANGE OF 6–8; MOISTURE CONTENT 35–55% BY WEIGHT 100% PASSING THROUGH 1" SIEVE; SOLUBLE SALT CONTENT LESS THAN 0.5 MM HOS/CM; MEETING ALL APPLICABLE ENVIRONMENTAL CRITERIA FOR CLEAN FILL.
   A. ORGANIC MATTER AS A SOIL AMENDMENT: LEAF MOLD WITH 60–90% ORGANIC CONTENT BY WEIGHT. SHREDDED LEAF LITTER, COMPOSTED FOR A MINIMUM OF 1 YR. SHOULD BE FREE OF DEBRIS, STONES OVER 1/2", WOOD CHIPS OVER 1".
   B. SOIL IN BEDS AND PLANTING ISLANDS OTHER THAN BACKFILL MATERIAL AND TOPSOIL, SHOULD BE FRIABLE, WELL DRAINED, AND FREE OF DEBRIS, INCLUDING STONES AND TRASH.
   C. AMENDMENTS FOR BACK FILL IN TREE AND SHRUB PITS:
      a. GROUND LIMESTONE (WITH A MIN. OF 88% OF CALCIUM AND MAGNESIUM CARBONATES) USED PENDING RESULTS OF SOIL ANALYSIS.
         – BRING pH LEVELS TO 5.5 MIN. TO 6.5 FOR NON-ERICACEOUS PLANTS
         – BRING pH LEVELS TO 4.5 MIN. TO 5.5 FOR ERICACEOUS PLANTS
      b. TERRA-SORB BY 'PLANT HEALTH CARE' 800-421-9051 (SEE MANUFACTURER RECOMMENDATIONS) USED IN PLANTER BACKFILL MIXTURE WITH TREES AND SHRUBS.
      c. MYCOR-ROOT SAVER BY 'PLANT HEALTH CARE' 800-421-9051 (SEE MANUFACTURER RECOMMENDATIONS) USED IN BACKFILL MIXTURE WITH TREES.
5. WHERE PLANTING AREAS ARE PROPOSED FOR FORMER PAVED OR GRAVEL AREAS, BEDS SHALL BE EXCAVATED TO A MINIMUM 30" DEPTH AND, AT A MINIMUM, BE BACKFILLED WITH BOTTOM LAYER OF SANDY LOAM (ORGANIC CONTENT LESS THAN 2%) OVER WHICH TOPSOIL AND PLANTING SOILS WILL BE PLACED AT DEPTHS INDICATED IN PLANS, DETAILS AND NOTES.
6. CLEAN SOIL FILL IN LANDSCAPE AREAS:
   LANDSCAPE FILL MATERIAL BELOW PLANTING SOILS, SHALL HAVE THE PHYSICAL PROPERTIES OF A SANDY LOAM WITH AN ORGANIC CONTENT OF LESS THAN 2% AND A PH BETWEEN 5 – 7.
7. SOIL PLACEMENT:
   A. CONTRACTOR TO PROVIDE SIX INCHES (6") MINIMUM DEPTH PLANTING SOIL LAYER IN LAWN AREAS, TWELVE INCHES (12") MINIMUM DEPTH PLANTING SOIL LAYER IN GROUNDCOVER AND PERENNIAL AREAS, EIGHTEEN INCHES (18") MINIMUM DEPTH PLANTING SOIL LAYER IN SHRUB AREAS, AND THIRTY-SIX INCHES (36") MINIMUM DEPTH PLANTING SOIL LAYER IN TREE PLANTING AREAS.
   B. SCARIFY AND/OR TILL COMPACTED SUBSOILS TO A MINIMUM DEPTH OF 6 INCHES. THOROUGHLY MIX A 6 INCH DEPTH LAYER OF PLANTING SOIL INTO THE SUBSOIL PRIOR TO PLACING PLANTING SOIL AT THE DEPTHS INDICATED ABOVE. PLANTING SOIL SHALL BE PLACED IN 12-18" LIFTS AND WATER THOROUGHLY BEFORE INSTALLING NEXT LIFT. REPEAT UNTIL DEPTHS AND FINISH GRADES HAVE BEEN ACHIEVED. NO SOILS SHALL BE PLACED IN A FROZEN OR MUDDY CONDITION.
   C. PLANTING SOIL PRESENT AT THE SITE, IF ANY, MAY BE USED TO SUPPLEMENT TOTAL AMOUNT REQUIRED. CONTRACTOR TO FURNISH AN ANALYSIS OF ON-SITE PLANTING SOIL UTILIZED IN ALL PLANTING AREAS.
8. SOIL CONDITIONING:
   A. ADJUST pH AND NUTRIENT LEVELS AS REQUIRED TO ENSURE AN ACCEPTABLE GROWING MEDIUM. LOWER pH USING ELEMENTAL SULFUR ONLY. PEAT MOSS OR COPPER SULFATE MAY NOT BE USED. GROUND LIMESTONE AS A SOIL AMENDMENT MATERIAL WILL ONLY BE USED PENDING RESULTS OF SOIL ANALYSIS. PROVIDE WITH MINIMUM 88% CALCIUM AND MAGNESIUM CARBONATES AND SHALL HAVE TOTAL 100% PASSING THE 10 MESH SIEVE, MINIMUM 90% PASSING 20 MESH SIEVE, AND MINIMUM 60% PASSING 100 MESH SIEVE.
   B. ALL DEBRIS EXPOSED FROM EXCAVATION AND CULTIVATION SHALL BE DISPOSED OF AT THE CONTRACTOR'S EXPENSE.
   C. SOIL MODIFICATIONS (PENDING RESULTS OF SOIL ANALYSIS):
      a. THOROUGHLY TILL ORGANIC MATTER (LEAF COMPOST) INTO THE TOP 6 TO 12 IN. OF MOST PLANTING SOILS TO IMPROVE THE SOIL'S ABILITY TO RETAIN WATER AND NUTRIENTS. ALL PRODUCTS SHOULD BE COMPOSTED TO A DARK COLOR AND BE FREE OF PIECES WITH IDENTIFIABLE LEAF OR WOOD STRUCTURE. AVOID MATERIAL WITH A pH HIGHER THAN 7.0. PEAT MOSS MAY NOT BE USED AS ORGANIC MATTER AMENDMENT.
      b. MODIFY HEAVY CLAY OR SILT (MORE THAN 40% CLAY OR SILT) BY ADDING COMPOSTED PINE BARK (UP TO 30% BY VOLUME) AND/OR GYPSUM. COARSE SAND MAY BE USED IF ENOUGH IS ADDED TO BRING THE SAND CONTENT TO MORE THAN 60% OF THE TOTAL MIX. IMPROVE DRAINAGE IN HEAVY SOILS BY PLANTING ON RAISED MOUNDS OR BEDS AND INCLUDING SUBSURFACE DRAINAGE LINES.
      c. MODIFY EXTREMELY SANDY SOILS (MORE THAN 85% SAND) BY ADDING ORGANIC MATTER AND/OR DRY, SHREDDED CLAY LOAM UP TO 30% OF THE TOTAL MIX.

LAWN SEED MIX:

1. LAWN SEED MIX: LESCO GRASS SEED – ALL PRO TRANSITION MIX (3 TURF-TYPE TALL-FESCUE GRASSES)

   NOTES:
   A) SEED RATE:
      1) NEW ESTABLISHMENT: SEED AT A RATE OF 6–8 LBS/1000 SQ FT
      2) RENOVATION: 20–50% EXISTING COVER: 5–7 LBS/1000 SQ FT
         50–75% EXISTING COVER: 4–6 LBS/1000 SQ FT
2. GENERAL SEED NOTES:
   A) FINAL SEED MIXTURES, RATES, AND SPECIES TO BE DETERMINED BASED ON PROJECT LANDSCAPE ARCHITECT REVIEW.
   B) SEEDING SHALL TAKE PLACE IN THE SPRING (APRIL 1 TO JUNE 15) OR THE FALL (SEPTEMBER 1 TO OCTOBER 15).
   C) ELIMINATE UNWANTED VEGETATION PRIOR TO SEEDING USING A NON-SELECTIVE HERBICIDE PER MANUFACTURER'S SPECIFICATIONS.
   D) IT IS RECOMMENDED THAT CONTRACTOR INSTALL SEED MIXTURE USING A NO-TILL TRUAX-TYPE DRILL SEEDER WHERE APPLICABLE.
   E) THERE MUST BE CONTINUOUS SOIL MOISTURE FOR 4–6 WEEKS TO ALLOW FOR PROPER GERMINATION.

IRRIGATION NOTES:

1. THE IRRIGATION CONTRACTOR SHALL PROVIDE SHOP DRAWINGS OF THE IRRIGATION INSTALLATION PLAN AND CUT-SHEETS FOR ALL COMPONENTS FOR REVIEW AND APPROVAL BY THE PROJECT LANDSCAPE ARCHITECT OR OWNER'S REPRESENTATIVE PRIOR TO CONSTRUCTION. THE IRRIGATION INSTALLATION PLAN SHALL BE COMPLETE WITH ZONE DESIGNATIONS AND WATER USAGE IN GALLONS PER MINUTE PER ZONE, RUN TIME SCHEDULE, LEGEND OF COMPONENTS AND PLAN GRAPHICS WITH QUANTITIES, MINIMUM SYSTEM REQUIREMENTS INCLUDING STATIC PRESSURE AT THE WATER CONNECTION POINT, ESTIMATED WATER BUDGET, CONSTRUCTION DETAILS AND INFORMATION SHEETS. THE PLAN SHALL ALSO INCLUDE LOCATIONS OF ALL PROPOSED SLEEVES AND THEIR SIZES, LOCATIONS OF ALL LATERAL LINE SIZE STEP-DOWNS WITH SIZE INDICATIONS, LOCATION OF ALL SOIL MOISTURE SENSORS, CONTROLLER, VALVES AND ALL OTHER COMPONENTS NECESSARY FOR THE SYSTEMS OPERATION.
2. LANDSCAPE AREAS SHALL BE IRRIGATED WITH POP-UP SPRAY, ROTARY IRRIGATION HEADS, OR DRIP IRRIGATION IN SUFFICIENT DENSITY TO COVER THE ENTIRE AREA.
3. CONTRACTOR TO AVOID DISTURBANCE OF EXISTING PLANT MATERIAL WHEN LOCATING VALVES AND PIPE LINES. ANY PLANT MATERIAL DAMAGED AS A RESULT OF IRRIGATION INSTALLATION SHALL BE REPLACED AT NO ADDITIONAL COST TO THE OWNER.
4. ALL EXCAVATION MATERIAL SHALL BE PLACED BACK IN TRENCHES.
5. ALL DISTURBED LANDSCAPE AND PAVED AREAS SHALL BE RESTORED TO THE CONDITION FOUND PRIOR TO START OF INSTALLATION.
6. DEPTH OF TRENCHES SHALL BE SUFFICIENT OR PROVIDE A MINIMUM COVER ABOVE THE TOP OF PIPE AS FOLLOWS:
   – 12" OVER NON-PRESSURE LATERAL LINES
   – 18" OVER NON-PRESSURE LATERAL LINES UNDER PAVING
   – 18" OVER CONTROL WIRES
   – 18" OVER MAIN LINE
   – 24" OVER MAIN LINE UNDER PAVING
7. THE IRRIGATION CONTRACTOR IS RESPONSIBLE FOR COORDINATING THE LOCATION OF THE PLUMBING TIE-INS, SLEEVES UNDER PAVEMENTS (AS NECESSARY), AND CONTROL DEVICES WITH THE GENERAL CONTRACTOR, OWNER, AND OWNER'S REPRESENTATIVE.
8. CONTRACTOR TO COORDINATE INSTALLATION OF IRRIGATION SYSTEM WITH EXISTING AND PROPOSED UTILITIES, SITE DRAINAGE SYSTEMS, AND PAVING.
9. CONTRACTOR SHALL PROMPTLY NOTIFY THE OWNER'S REPRESENTATIVE SHOULD ANY UTILITIES, NOT SHOWN ON THE PLANS, BE FOUND DURING INSTALLATION WORK.
10. WATERPROOF ALL WIRE CONNECTORS USING 3M 'DBY' WATERPROOF CONNECTORS OR EQUIVALENT.
11. DRAIN VALVES ARE TO BE PROVIDED AT SUFFICIENT INTERVALS TO PROVIDE COMPLETE DRAINAGE OF ALL PIPING.
12. COORDINATE THE LOCATION OF CONTROLS, IRRIGATION CONTROLLER, AND SOIL MOISTURE SENSORS WITH THE PROJECT MEP AND OWNER PRIOR TO INSTALLATION.
13. IRRIGATION CONTRACTOR SHALL MAKE FIELD ADJUSTMENTS TO IRRIGATION DESIGN WHERE REQUIRED TO PROVIDE 100% COVERAGE OF ALL LANDSCAPE AREAS, AS DESIGNATED ON THIS PLAN.
14. INSTALLATION MUST COMPLY WITH ALL LOCAL CODES AND CONDITIONS.
15. ALL IRRIGATION WORK SHALL BE GUARANTEED FOR 1 YEAR AFTER

PLANT LIST: WET POND

ZONE 1: 6"–1' PERMANENT WATER (24,937 SF)

QTY.	BOTANICAL NAME	COMMON NAME	ROOT	SPACING
2,743	CERATOPHYLLUM DEMERSUM	COMMON HORNWORT	2" PLUG	18" O.C.
2,743	ELODEA CANADENSIS	WATERWEED	TUBERS	18" O.C.
2,743	POTAMOGETON PECTINATUS	SAGO POND PLANT	TUBERS	18" O.C.
2,743	VALLISNERIA AMERICANA	WILD CELERY	TUBERS	18" O.C.
TOTAL 10,972				

ZONE 2: 12"–6" WATER (6,490 SF)

QTY.	BOTANICAL NAME	COMMON NAME	ROOT	SPACING
1,622	JUNCUS EFFUSUS	SOFT RUSH	2" PLUG	12" O.C.
1,622	PONTEDERIA CORDATA	PICKERELWEED	2" PLUG	12" O.C.
1,623	SCIRPUS VALIDUS	SOFT–STEM BULRUSH	2" PLUG	12" O.C.
1,623	SPARGANIUM EURYCARPUM	GIANT BUR–REED	2" PLUG	12" O.C.
TOTAL 6490				

ZONE 3: 6"–0" WATER (7,013 SF)

QTY.	BOTANICAL NAME	COMMON NAME	ROOT	SPACING
1,402	IRIS VERSICOLOR	BLUE FLAG IRIS	2" PLUG	12" O.C.
1,402	ANDROPOGON VIRGINICUS	BROOMSEDGE	2" PLUG	12" O.C.
1,403	PANICUM VIRGATUM	SWITCHGRASS	2" PLUG	12" O.C.
1,403	SCRIPUS VALIDUS	SOFT–STEM BULRUSH	2" PLUG	12" O.C.
1,403	ACORUS CALAMUS	SWEET FLAG	2" PLUG	12" O.C.
TOTAL 7,013				

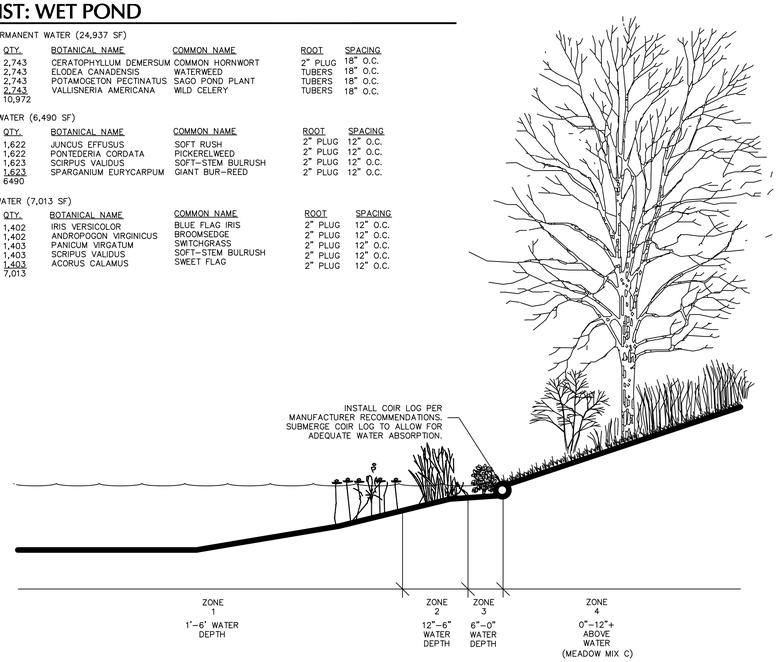

1 WET POND PLANTING SECTION

NTS

WET POND NOTES

CONSTRUCTION PROCESS:

1. PREPARE FINAL PONDSCAPING AND GRADING PLANS OF THE STORMWATER WETLAND. AT THIS TIME ORDER WETLAND PLANT STOCK FROM AQUATIC NURSERIES.
2. ONCE THE STORMWATER WETLAND COLUMN HAS BEEN EXCAVATED, THE WETLAND SHOULD BE GRADED TO CREATE THE MAJOR INTERNAL FEATURES (POOL, AQUATIC BENCH, DEEP–WATER CHANNELS, ETC).
3. TOP SOIL AND/OR WETLAND MULCH IS ADDED TO THE STORMWATER WETLAND EXCAVATION. SINCE DEEP SUBSOILS OFTEN LACK THE NUTRIENTS AND ORGANIC MATTER TO SUPPORT VIGOROUS PLANT GROWTH, THE ADDITION OF MULCH OR TOPSOIL IS IMPORTANT. IF IT IS AVAILABLE, WETLAND MULCH IS PREFERABLE TO TOPSOIL. AFTER THE MULCH OR TOPSOIL HAS BEEN ADDED, THE STORMWATER WETLAND NEEDS TO BE GRADED TO ITS FINAL ELEVATIONS. ALL WETLAND FEATURES ABOVE THE NORMAL POOL SHOULD BE STABILIZED TEMPORARILY. SEE SOIL EROSION AND SEDIMENT CONTROL PLAN FOR SEED SPECIFICATION.
4. AFTER GRADING TO FINAL ELEVATIONS, THE POND DRAIN SHOULD BE CLOSED AND THE POOL ALLOWED TO FILL. USUALLY NOTHING SHOULD BE DONE TO THE STORMWATER WETLAND FOR SIX TO NINE MONTHS OR UNTIL THE NEXT PLANTING SEASON. A GOOD DESIGN RECOMMENDATION IS TO EVALUATE THE WETLAND ELEVATION DURING A STANDING PERIOD OF APPROXIMATELY SIX MONTHS. DURING THIS TIME THE STORMWATER WETLAND CAN EXPERIENCE STORM FLOWS AND INUNDATION, SO THAT IT CAN BE DETERMINED WHERE THE PONDSCAPING ZONES ARE LOCATED AND WHETHER OR NOT THE FINAL GRADE AND MICROTOPOGRAPHY WILL PERSIST OVERTIME.
5. BEFORE PLANTING THE STORMWATER WETLAND DEPTHS SHOULD BE MEASURED TO THE NEAREST INCH TO CONFIRM PLANTING DEPTH. THE PONDSCAPE PLAN MAY BE MODIFIED AT THIS TIME TO REFLECT ALTERED DEPTHS OR AVAILABILITY OF PLANT STOCK. ZONES SHOULD BE STAKED OUT AT THE APPROPRIATE LEVELS PRIOR TO PLANTING UNDER THE SUPERVISION OF LANDSCAPE ARCHITECT OR WETLAND SCIENTIST.
6. EROSION CONTROLS SHOULD BE STRICTLY APPLIED DURING THE STANDING AND PLANTING PERIODS. ALL AREAS ABOVE THE NORMAL POOL ELEVATION SHOULD BE VEGETATIVELY STABILIZED DURING THE STANDING PERIOD, USUALLY WITH HYDROSEEDING.
7. THE STORMWATER WETLAND SHOULD BE DE–WATERED AT LEAST THREE DAYS BEFORE PLANTING, AS A DRY WETLAND IS EASIER TO PLANT THAN A WET ONE.
8. DURING THE INITIAL PLANTING PRECAUTIONS SHOULD BE UNDERTAKEN TO PREVENT AND PROHIBIT ANIMALS FROM GRAZING UNTIL PLANT COMMUNITIES ARE WELL ESTABLISHED. SUCH PRECAUTIONS COULD BE DEER FENCING, MUSKRAT TRAPPING, PLANTING AFTER SEASONAL BIRD MIGRATIONS OR ATTRACTING BIRDS OF PREY AND BATS TO CONTROL NUTRIA POPULATIONS.

OPERATIONS AND MAINTENANCE NOTES:

1. CONSTRUCTED STORMWATER WETLANDS REQUIRE CONSIDERABLE ROUTINE MAINTENANCE, BUT DO NOT REQUIRE LARGE, INFREQUENT SEDIMENT REMOVAL UNLIKE CONVENTIAL POND SYSTEMS THAT REQUIRE RELATIVELY MINOR ROUTINE MAINTENANCE AND EXPENSIVE SEDIMENT REMOVAL AT INFREQUENT INTERVALS.
2. CAREFUL OBSERVATION OF THE SYSTEM OVER TIME IS REQUIRED IN THE FIRST THREE YEARS AFTER CONSTRUCTION. WITHIN THE FIRST GROWING SEASON OR UNTIL IT IS DETERMINED THAT THE SYSTEM IS ESTABLISHED, FREQUENT INSPECTIONS WILL BE REQUIRED, POSSIBLY BIWEEKLY OR MONTHLY BASIS. FOLLOWING THIS, TWICE A YEAR INSPECTIONS ARE NEEDED DURING BOTH THE GROWING AND NON–GROWING SEASON. DATA GATHERED DURING THESE INSPECTIONS SHOULD BE RECORDED, MAPPED AND ASSESSED. THE FOLLOWING OBSERVATIONS SHOULD BE MADE DURING THE INSPECTIONS:
   a. TYPES AND DISTRIBUTION OF DOMINANT WETLAND PLANTS IN THE MARSH.
   b. THE PRESENCE AND DISTRIBUTION OF PLANTED WETLAND SPECIES; THE PRESENCE AND DISTRIBUTION OF VOLUNTEER WETLAND SPECIES; SIGNS THAT VOLUNTEER SPECIES ARE REPLACING THE PLANTED WETLAND SPECIES.
   c. PERCENTAGE OF UNVEGETATED STANDING WATER (EXCLUDING THE DEEP WATER CELLS WHICH ARE NOT SUITABLE FOR EMERGENT PLANT GROWTH).
   d. THE MAXIMUM ELEVATION AND THE VEGETATIVE CONDITION IN THIS ZONE, IF THE DESIGN ELEVATION OF THE NORMAL POOL IS BEING MAINTAINED FOR WETLANDS WITH EXTENDED ZONES.
   e. STABILITY OF THE ORIGINAL DEPTH ZONES AND THE MOCROTOPOGRAPHIC FEATURES.
   f. ACCUMULATION OF SEDIMENT IN THE FOREBAY AND MICROPOOL.
   g. SURVIVAL RATE OF PLANTS IN THE WETLAND BUFFER.
   h. SHALLOW MARSH AND EXTENDED DETENTION WETLAND DESIGNS INCLUDE FOREBAYS TO TRAP SEDIMENT BEFORE REACHING THE WETLAND. THEREFORE BAYS SHOULD BE CLEANED OUT EVERY YEAR.
   i. CLEAN OUTS AND DISCHARGE LOCATIONS SHOULD BE INSPECTED MORE FREQUENTLY. INSPECTIONS FOR THEM COULD COINCIDE WITH ABOVE NORMAL OR EXTENDED PERIOD RAINFALL, RATHER THAN JUST INCREASING THE INSPECTION INTERVALS. THUS, IF THERE ARE PERIODS OF DROUGHT OR SMALL INFREQUENT EVENTS IT WOULD NOT BE NECESSARY FOR AN INSPECTION.
3. THE OWNER OF THE PROPERTY SHALL BE THE RESPONSIBLE AGENT FOR THE STORMWATER MANAGEMENT FACILITIES ON SAID PROPERTY.

REFER TO SHEET LP100 FOR PLANTING SCHEDULE

NOTES AND SEED MIXES AS PREPARED BY ALL-POINTS TECHNOLOGY, INC.

WETLAND MITIGATION NOTES

WETLAND AND HABITAT MITIGATION GOALS:

1) COMPENSATE FOR WETLAND AND UPLAND REVIEW AREA ACTIVITIES BY PROVIDING A COMPREHENSIVE WETLAND MITIGATION PLAN THAT INCLUDES CREATING A NEW WETLAND CREATION AREA THAT HAD BEEN PARTIALLY COMPLETED UNDER A PREVIOUS LOCAL WETLAND PERMIT (WETLANDS FILE #75–2017–04).
2) THE WETLAND CREATION AREA WILL INCLUDE REGRADING THE PARTIALLY COMPLETED WETLAND REPLICATION AREA TO COMPLY WITH THE PREVIOUS PERMIT–APPROVED GRADING (A RECENT SURVEY DETERMINED THAT THE EXISTING WETLAND REPLICATION GRADES WERE HIGHER THAN THOSE APPROVED), ESTABLISH APPROPRIATELY THICK WETLAND TOPSOIL (FIELD INVESTIGATIONS REVEAL THAT ONLY 6 INCHES OF WETLAND TOPSOIL CURRENTLY EXISTS), AND PROVIDE NATIVE WETLAND MEADOW, SHRUB, AND TREE PLANTINGS (ONLY WET MEADOW HABITAT CURRENTLY EXISTS).
3) PLANT WETLAND CREATION AREA WITH A SUFFICIENT DENSITY OF NATIVE PLANTS, WITH A FOCUS OF CREATING A VARIETY OF WETLAND COVER TYPES TO SUPPORT A VARIETY OF FUNCTIONS AND VALUES WITH A PARTICULAR FOCUS ON ENHANCING WILDLIFE FUNCTION.
4) CONSULTATION WITH THE CONNECTICUT DEPARTMENT OF ENERGY AND ENVIRONMENTAL PROTECTION NATURAL DIVERSITY DATA BASE (NDDB NO. 202209676) REVEALED RARE SPECIES IN THE VICINITY OF THE SITE, RECOMMENDING PRESERVATION/ENHANCEMENT OF SPARSELY VEGETATED OPEN SANDY HABITAT. EXISTING AREAS OF OPEN SANDY HABITAT HAVE BEEN IDENTIFIED IN THE SOUTHEASTERN PORTION OF THE PROJECT OUTSIDE OF THE PROPOSED LIMITS OF DEVELOPMENT WITHIN GENERALLY LEVEL AREAS THAT WILL BE ENHANCED.

GENERAL MITIGATION NOTES:

1) THE PROJECT WETLAND SCIENTIST WITH EXPERTISE IN WETLAND MITIGATION WILL SUPERVISE ALL ELEMENTS OF THE MITIGATION PLAN.
2) PLASTIC MESH SLEEVES, TREE SHELTERS AND DEER REPELLANTS WILL BE USED AS NECESSARY TO PROTECT PLANTED TREES AND SHRUBS FROM EXCESSIVE DEER DAMAGE. PLANTS WITH EXCESSIVE DAMAGE WILL BE REPLACED.
3) A PRE–CONSTRUCTION MEETING WILL BE HELD ON SITE BETWEEN THE PROJECT WETLAND SCIENTIST AND CONTRACTOR(S) PERFORMING ALL ASPECTS OF THE MITIGATION PLAN (E.G., WETLAND CREATION, SANDY HABITAT ENHANCEMENTS, ETC.). THE PRIMARY INTENT OF THE PRE–CONSTRUCTION MEETING IS TO DISCUSS THE GOALS OF THE MITIGATION PLAN AND IMPLEMENTATION OF REQUIRED ELEMENTS NECESSARY TO ACHIEVE THESE GOALS AND SEQUENCE OF ELEMENTS. THE TOWN OF BLOOMFIELD WETLAND STAFF WILL BE PROVIDED NOTICE OF THIS MEETING A MINIMUM OF 3 BUSINESS DAYS PRIOR TO THE MEETING WITH AN INVITATION TO ATTEND.
4) THE TOWN OF BLOOMFIELD WETLAND STAFF SHALL BE NOTIFIED A MINIMUM OF 48 HOURS IN ADVANCE OF ANY PHASE OF THE MITIGATION PROJECT.

PROPOSED WETLAND CREATION AREA:

1) THE WETLAND CREATION AREA IS PROPOSED IN CLOSE PROXIMITY TO EXISTING WETLANDS TO THE EAST, WEST, AND SOUTH, WITHIN AN EXISTING CLEARED AREA THAT HAD PREVIOUSLY BEEN SUBJECT TO INITIAL GRADING, PLACEMENT OF TOPSOIL, AND SEEDING WITH WETLAND SEED MIX. THE WETLAND CREATION AREA WILL INCLUDE FORESTED, SCRUB–SHRUB, AND WET MEADOW COVER TYPES TO PROMOTE A DIVERSE VARIETY OF WETLAND HABITATS THAT WILL SUPPORT SEVERAL WETLAND FUNCTIONS AND VALUES AT PRINCIPAL OR SECONDARY LEVELS. CONSTRUCTION OF THE WETLAND CREATION AREA HAS BEEN DESIGNED TO MINIMIZE EROSION, PREVENT SEDIMENT FROM ENTERING ADJACENT WETLANDS, AND TO MAXIMIZE THE ESTABLISHMENT OF PLANTED VEGETATION. THIS CREATION AREA WILL PROVIDE SIGNIFICANTLY HIGHER WETLAND FUNCTIONS AND VALUES THAN THE WETLANDS ORIGINALLY IMPACTED BY THE PRIOR PROJECT (WETLANDS FILE #75–2017–04). THIS WETLAND CREATION PLAN HAS BEEN DEVELOPED IN GENERAL ACCORDANCE WITH THE U.S. ARMY CORPS OF ENGINEERS NEW ENGLAND DISTRICT WETLAND MITIGATION PLAN GUIDANCE. THE AREA WILL BE CONSTRUCTED PER THE FOLLOWING:
2) PRIOR TO ANY EARTHWORK, A SILT FENCE AND/OR COMPOST FILTER SOCK EROSION CONTROL BARRIER WILL BE INSTALLED BETWEEN AROUND THE PROPOSED WETLAND MITIGATION AREA TO ISOLATE THE WORK ZONE FROM SURROUNDING WETLANDS.
3) THE PROJECT WETLAND SCIENTIST SHALL BE NOTIFIED BY THE CONTRACTOR A MINIMUM OF SEVEN (7) BUSINESS DAYS PRIOR TO ANY PHASE OF THE MITIGATION PROJECT INCLUDING EXCAVATION AND GRADING, SOIL TRANSFER AND PLANTING, TO MONITOR AND OR SEE IMPLEMENTATION OF THE WETLAND CREATION PLAN.
4) THE TOWN OF BLOOMFIELD WETLAND STAFF SHALL BE NOTIFIED A MINIMUM OF48 HOURS PRIOR TO THE INSTALLATION OF EROSION CONTROLS AND AGAIN BEFORE THE COMMENCEMENT OF EXCAVATION WORK.
5) MATURE TREES IMMEDIATELY ADJACENT TO THE MITIGATION AREAS, WHICH ARE AT OR NEAR THE FINAL DESIGN ELEVATIONS OF THE AREA, WILL BE IDENTIFIED AND PRESERVED (WHERE POSSIBLE).
6) EXCAVATION ACTIVITIES WILL FIRST CONSIST OF REMOVAL AND SEGRETATION OF EXISTING TOPSOIL FOR REUSE IN THE WETLAND CREATION AREA. SUBSOIL WILL BE REMOVED TO 12 INCHES BELOW THE PROPOSED CONTOURS AS NOTED ON THE PLAN WHICH WILL INTERCEPT THE LOCAL GROUNDWATER TABLE IN ORDER TO CREATE VARING LEVELS OF SOIL SATURATION AND INUNDATION NEAR THE FINAL GRADE OF THE WETLAND CREATION AREA. MODIFICATIONS TO THIS GRADING PLAN MAY BE MADE IN THE FIELD AT THE DIRECTION OF THE REVIEWING PROJECT WETLAND SCIENTIST IN RESPONSE TO ACTUAL SUBSURFACE SOIL AND HYDROLOGIC CONDITIONS. THE PROJECT WETLAND SCIENTIST WILL INSPECT THE SUB–GRADE OF THE WETLAND CREATION AREA TO ENSURE THAT THE PROPER HYDROLOGY HAS BEEN ESTABLISHED PRIOR TO PLACEMENT OF WETLAND TOPSOIL.
7) THE WETLAND TOPSOIL WITHIN THE WETLAND CREATION AREA SHALL BE A MINIMUM OF 12 INCHES DEEP. THE SEGREGATED WETLAND TOPSOIL WILL BE AMENDED WITH ADDITIONAL WETLAND TOPSOIL TO MEET THE REQUIREMENTS OF PLACEMENT OF 12 INCHES OF WETLAND TOPSOIL ACROSS THE ENTIRE WETLAND CREATION AREA. AMENDED WETLAND TOPSOIL SHALL CONSIST OF PREPARED WEED–FREE TOPSOIL MADE UP OF A 1: 1 MIXTURE (OR EQUAL VOLUMES) OF ORGANIC AND MINERAL MATERIALS THAT CONTAINS AT LEAST 12 PERCENT ORGANIC CARBON CONTENT BY WEIGHT. CLEAN COMPOSTED LEAF MOLD OR COMMERCIALLY AVAILABLE COMPOST FREE OF WEEDS OR INVASIVE SPECIES IS THE PREFERRED AMENDMENT TO ACHIEVE THIS STANDARD, THOUGH OTHER MATERIALS MAY BE USED IF APPROVED BY THE PROJECT WETLAND SCIENTIST.
8) THESE SOILS WILL THEN BE GRADED TO ACHIEVE A SLIGHT HUMMOCK/HOLLOW MICROTOPOGRAPHY, SIMILAR TO THAT OF A NATURAL WETLAND SUBSTRATE. THE CONTRACTOR SHALL ENSURE THAT PROPER SOIL COMPACTION LEVELS (LOOSE TO FRIABLE) ARE MAINTAINED AND APPROPRIATE CORRECTION MEASURES (E.G., ROTOTILLING) MAY BE NECESSARY.
9) WETLAND CREATION AREA PLANTINGS SHALL TAKE PLACE ONCE THE ABOVE LISTED TASKS HAVE BEEN COMPLETED. THE WETLAND CREATION AREA WILL BE PLANTED WITH NATIVE TREES AND SHRUBS AS NOTED IN THE PLANTING SCHEDULE AND SOWN WITH A NATIVE NEW ENGLAND WETLAND SEED MIX (NEW ENGLAND WETLAND PLANTS, INC. (413) 548–8000 OR EQUIVALENT) AFTER THE GRADING IS COMPLETED.
10) THE PROJECT WETLAND SCIENTIST SHALL INSPECT THE PLANTING STOCK SPECIMENS FOR HEALTH, PEST, AND SUITABLE FOR USE WITHIN THE REPLICATION AREA. UNSUITABLE SPECIMENS WILL BE REJECTED AND REPLACED WITH SUITABLE SPECIMENS. ANY PLANTING SUBSTITUTIONS MUST BE APPROVED BY THE PROJECT WETLAND SCIENTIST. ALL WOODY PLANT STOCK SHALL BE CONTAINER–GROWN OR BURLAP BALLED. PLANTING WITHIN THE WETLAND MITIGATION AREA AND ADJACENT BUFFER ENHANCEMENT AREA WILL CONFORM TO THE PLANS OR WILL BE COMPLETED IN ACCORDANCE WITH DIRECTIONS PROVIDED IN THE FIELD BY THE PROJECT WETLAND SCIENTIST. ONLY PLANT MATERIALS NATIVE AND INDIGENOUS TO CONNECTICUT SHALL BE USED. INVASIVE PLANT SPECIES WILL NOT BE USED IN THE MITIGATION AREA.
11) ALL PLANT MATERIALS INSTALLED SHALL MEET OR EXCEED THE SPECIFICATIONS OF THE 'AMERICAN STANDARDS FOR NURSERY STOCK SECTION 10: SEEDLING TREES AND SHRUBS" BY THE AMERICAN ASSOCIATION OF NURSERYMEN.
12) NO CULTIVARS OF NATIVE PLANTS IDENTIFIED IN THE PLANTING SCHEDULE SHALL BE USED UNLESS APPROVED BY THE PROJECT WETLAND SCIENTIST.
13) THE CONTRACTOR SHALL BE RESPONSIBLE FOR THE CAREFUL INSTALLATION, MAINTENANCE (INCLUDING WATERING), AND ESTABLISHMENT OF THE PLANT MATERIAL IN THE MITIGATION AREA. A MAINTENANCE SCHEDULE FOR IRRIGATION AND PRUNING (AS NECESSARY) WILL BE ESTABLISHED BY THE CONTRACTOR. ALL PLANTS SHALL BE GUARANTEED BY THE CONTRACTOR TO REMAIN ALIVE AND HEALTHY FOR THE FULL TWELVE (12) MONTH PERIOD FOLLOWING THE DATE OF PLANTING.
14) ALL PLANTINGS TO BE SPACED GENERALLY AS NOTED ON THE PLANTING SCHEDULE WITH ASSISTANCE FROM THE PROJECT WETLAND SCIENTIST TO SIMULATE NATURAL GROWTH PATTERNS.
15) ROCKS AND BOULDERS UNCOVERED DURING EXCAVATION, MAY BE LEFT IN PLACE PROVIDED THAT THEY DO NOT SIGNIFICANTLY DECREASE THE PLANTABLE AREA OF THE MITIGATION AREA. ROCKS AND BOULDERS WILL BE PLACED IN SUCH A WAY AS TO PROVIDE CREVICES AND CAVITIES SUITABLE FOR USE BY WILDLIFE. NO MORE THAN FIVE PERCENT OF THE MITIGATION AREA WILL BE TREATED IN THIS MANNER.
16) FALLEN LOGS, BRANCHES, STUMPS AND OTHER NATURAL DEBRIS, EXCLUDING INVASIVE PLANTS, WILL BE RELOCATED TO THE MITIGATION AREAS TO PROVIDE BENEFICIAL HABITAT COVER FEATURES FOR WILDLIFE. THIS WILL INCLUDE DOWNED AND UNCOVERED MATERIAL THAT IS ACQUIRED DURING THE PROJECT'S CLEARING ACTIVITIES AND WILL BE DISTRIBUTED TO COVER NO MORE THAN FIVE PERCENT OF THE MITIGAITON AREA'S SURFACE. THE NATURAL DEBRIS CAN BE OF VARYING SIZES AND IN VARYING DEGREES OF DECOMPOSITION.
17) THE EROSION CONTROL BARRIERS WILL BE DISASSEMBLED AND PROPERLY DISPOSED OF BEFORE NOVEMBER 1ST OF THE THIRD FULL GROWING SEASON AFTER PLANTING OF THE MITIGATION AREA. ANY SEDIMENT COLLECTED BY THESE DEVICES WILL BE REMOVED AND DISPOSED OF IN A MANNER THAT PREVENTS EROSION AND TRANSPORT TO WETLANDS. IF MINOR GRADING IS REQUIRED IN THIS ZONE TO PROVIDE SURFACE HYDROLOGIC CONNECTION BETWEEN THE AREAS, IT WILL BE DONE BY HAND AND STABILIZED WITH MULCH.

PROPOSED OPEN SANDY HABITAT RESTORATION AREA:

1) SPARSELY VEGETATED OPEN SANDY HABITAT WILL BE RESTORED/ENHANCED IN THE SOUTHEASTERN PORTION OF THE SITE.
2) THIS HABITAT RESTORATION/ENHANCEMENT AREA WILL REMOVE ANY ORGANICS AND TOPSOIL FROM THE SURFACIAL TO EXPOSE NUTRIENT POOR SANDY SUBSOIL SUITABLE FOR ESTABLISHMENT OF THIS HABITAT TYPE. THIS HABITAT CAN ALSO BE ESTABLISHED BY REMOVAL OF THE TOP 12 INCHES OF MATERIAL AND REPLACING IT WITH SANDY SUBSOIL SPOILS CREATED BY EARTHWORK FROM PROPOSED DEVELOPMENT AREAS OF THE SITE.
3) FOLLOWING COMPLETION OF THESE GRADING ACTIVITIES, THE SANDY HABITAT WILL BE SEEDED WITH A NATIVE NEW ENGLAND WARM GRASS SEED MIX (NEW ENGLAND WETLAND PLANTS, INC. (413) 548–8000 OR EQUIVALENT). THIS SEED MIX CONTAINS A BROAD SPECTRUM OF NATIVE WARM SEASON GRASSES THAT ARE WELL SUITED TO SANDY, DROUGHTY, AND LOW FERTILITY CONDITIONS. BEST RESULTS ARE OBTAINED WITH A MID–LATE SPRING SEEDING.

FERTILIZER AND PESTICIDE USE NOTES:

1) THE USE OF FERTILIZER AND PESTICIDES IN THE WETLAND AND OPEN SANDY MITIGATION AREAS ARE PROHIBITED. HERBICIDE USAGE WILL ONLY OCCUR AS NECESSARY FOR THE CONTROL OF INVASIVE SPECIES WITHIN THE MITIGATION AREAS.
2) ALL FEDERAL, STATE AND LOCAL REGULATIONS REGARDING HERBICIDE USE, APPLICATOR PERMIT AND POSTING REQUIREMENTS SHALL BE FOLLOWED.
3) ALL HERBICIDE APPLICATIONS SHALL BE PERFORMED BY A STATE LICENSED INDIVIDUAL UNDER THE SUPERVISION OF THE PROJECT WETLAND SCIENTIST.
4) CERTIFICATIONS, LICENSES AND PERMITS SHALL BE PRODUCED BY THE LICENSED APPLICATOR PRIOR TO THE START OF WORK.
5) ALL HERBICIDES SHALL BE MIXED WITH A DYE APPROVED BY U.S. EPA FOR USE AS A HERBICIDE ADJUVANTS, SUCH AS TURFMARK®DYE OR EQUIVALENT.
6) ONLY NONIONIC SURFACTANTS SHALL BE ADDED TO THE SPECIFIED HERBICIDES.

LONG TERM MITIGATION MONITORING:

1) LONG–TERM MONITORING OF THE WETLAND CREATION AREA WILL BE CONDUCTED AS FOLLOWS. THE MITIGATION AREA WILL BE MONITORED THE FIRST FIVE GROWING SEASONS FOLLOWING THEIR CONSTRUCTION. THE FIRST YEAR OF MONITORING WILL BE THE FIRST YEAR THAT THE SITE HAS BEEN THROUGH A FULL GROWING SEASON AFTER COMPLETION OF CONSTRUCTION AND PLANTING. FOR MONITORING PURPOSES, A GROWING SEASON STARTS NO LATER THAN MAY 31 AND ENDS NO EARLIER THAN NOVEMBER 15.
2) MONITORING REPORTS WILL BE SUBMITTED TO THE TOWN OF BLOOMFIELD WETLAND STAFF NO LATER THAN JANUARY 31 OF EACH YEAR FOLLOWING THE PREVIOUS YEAR OF MONITORING. THE REPORTS WILL PROVIDE DETAILS ON THE FOUR SUCCESS STANDARDS DESCRIBED BELOW WITH THE GOAL BEING THAT ALL SUCCESS STANDARDS ARE SATISFIED BY YEAR 5 OR THE MONITORING PERIOD. PERMANENT PHOTO STATIONS SHALL BE ESTABLISHED AT REPRESENTATIVE LOCATIONS WITH PHOTOGRAPHS FROM EACH STATION INCLUDED IN EACH ANNUAL REPORT TO TRACK PROGRESS. MONITORING REPORTS SHALL INCLUDE THE PERCENT SURVIVAL OF PLANTED SHRUBS AND TREES AS WELL AS THE EXTENT OF WET MEADOW HABITAT. REPORTS WILL ALSO INCLUDE OBSERVATIONS OF VEGETATION DEVELOPMENT AND WILDLIFE USAGE.
3) REMEDIAL ACTIONS RECOMMENDED AND/OR COMPLETED DURING THE MONITORING YEAR WILL ALSO BE PROVIDED IN THE REPORT.
4) PLANTS DETERMINED TO BE DEAD OR UNHEALTHY SHALL BE REPLACED IN KIND, AS NECESSARY, TO ACHIEVE THE SUCCESS STANDARDS NOTED BELOW. IF THERE ARE PROBLEMS THAT NEED TO BE ADDRESSED AND IF THE MEASURES TO CORRECT THEM REQUIRE PRIOR APPROVAL FROM THE TOWN OF BLOOMFIELD INLAND WETLANDS AND WATERCOURSES COMMISSION, THE PERMITTEE WILL CONTACT THE COMMISSION AS SOON AS THE NEED FOR CORRECTIVE ACTION IS DISCOVERED. IF FOLLOWING YEAR 5 OF THE MONITORING PROGRAM NOT ALL OF THE SUCCESS STANDARDS ARE SATISFIED, RECOMMENDATIONS FOR ADDITIONAL MONITORING/CORRECTIVE ACTIONS WILL BE REQUIRED.
5) THE WETLAND CREATION AREA WILL BE ASSESSED USING FOUR SUCCESS STANDARDS AS FOLLOWS. SUCCESS STANDARD 1: AT LEAST 75% OF THE SURFACE AREA, INCLUDING THE HERBACEOUS, SHRUB, AND FOREST STRATUMS, OF THE MITIGATION AREAS (COLLECTIVLEY THE PROPOSED WETLAND CREATION AREA) SHOULD BE ESTABLISHED WITH INDIGENOUS NATIVE SPECIES WITHIN TWO GROWING SEASONS. SUCCESS STANDARD 2: VEGETATION SHOULD BE CHECKED TO ENSURE THAT NO MORE THAN 20% OF THE SURFACE AREA IS OCCUPIED BY NON–NATIVE WOODY INVASIVE SPECIES. SUCCESS STANDARD 3: SLOPES WITHIN AND ADJACENT TO THE PROPOSED WETLAND CREATION AREA ARE STABILIZED. SUCCESS STANDARD 4: WETLAND CREATION AREA SUSTAINS SUFFICIENT HYDROLOGY TO SUPPORT 50% OR GREATER AERIAL DOMINANCE OF NATIVE WETLAND VEGETATION.
6) THE OPEN SANDY HABITAT RESTORATION AREA WILL BE ASSESSED USING FOUR SUCCESS STANDARDS AS FOLLOWS. SUCCESS STANDARD 1: BETWEEN 50 – 70% OF THE SURFACE AREA WILL BE ESTABLISHED WITH NATIVE WARM SEASON GRASSES AND FORBS WITHIN TWO GROWING SEASONS. SUCCESS STANDARD 2: VEGETATION SHOULD BE CHECKED TO ENSURE THAT NO MORE THAN 20% OF THE SURFACE AREA IS OCCUPIED BY NON–NATIVE INVASIVE SPECIES. SUCCESS STANDARD 3: NO MORE THAN 20% OF THE SURFACE AREA IS OCCUPIED BY NATIVE SHRUBS AND NO TREES PRESENT.

WETLAND SEED NOTES

1. MEADOW MIX 'D' – ERNST SEED MIX "WARM SEASON GRASS MIX"

70%	AVENA SATIVA	OATS, VARIETY NOT STATED
15%	SCHIZACHYRIUM SCOPARIUM	LITTLE BLUESTEM
10%	ANDROPOGON GERARDII 'NIAGARA'	BIG BLUESTEM 'NIAGARA'
5%	PANICUM VIRGATUM 'SHELTER'	SWITCH GRASS 'SHELTER'

NOTES:
SEED AT A RATE OF 40 LBS/ACRE OF 100% PURE LIVE SEED.

2. SEE LP501 MEADOW MIX 'C' – ERNST SEED MIX ERNMX–183 "NATIVE DETENTION AREA MIX"

WETLAND CREATION AREA PLANTING SCHEDULE

QTY.	BOTANICAL NAME	COMMON NAME	SIZE	ROOT	REMARKS
SHADE TREE(S)					
10	ACER RUBRUM	RED MAPLE	4–6'	B+B	spaced at 10' O.C.
5	QUERCUS PALUSTRIS	PIN OAK	4–6'	B+B	spaced at 10' O.C.
5	NYSSA SYLVATICA	BLACK GUM	4–6'	B+B	spaced at 10' O.C.
SHRUB(S)					
40	CORNUS AMOMUM	SILKY DOGWOOD	3–4'	CONTAINER	spaced at 5' O.C.
40	LINDERA BENZOIN	SPICEBUSH	3–4'	CONTAINER	spaced at 5' O.C.
40	ILEX VERTICILLATA	WINTERBERRY	3–4'	CONTAINER	spaced at 5' O.C.
40	CLETHERA ALNIFOLIA	SWEET PEPPERBUSH	3–4'	CONTAINER	spaced at 5' O.C.
40	VIBURNUM DENTATUM	NORTHERN ARROWWOOD	3–4'	CONTAINER	spaced at 5' O.C.
HERBACEOUS					
UNDERSOW WITH NEW ENGLAND WETMIX SEED MIX (NEW ENGLAND WETLAND PLANTS, INC. (413)548–8000, OR APPROVED EQUIVALENT) AT THE MANUFACTURERS RECOMMENDED SEEDING RATE AND PROTECTED WITH A WEED–FREE STRAW MULCH OR APPROVED EQUIVALENT.					

NOTES:
1. SPACING OF SHRUBS AND TREES TO SIMULATE NATURAL ECOLOGICAL COMMUNITIES AT DIRECTION OF WETLAND MONITOR.
2. THE 16,500 SF WETLAND CREATION AREA WILL BE COMPRISED OF 60% WET MEADOW HABITAT AND 40% SHRUB–TREE HABITAT.

FOR PERMITTING ONLY, NOT FOR CONSTRUCTION

Date	Description	No.

Revisions

STATE OF CONNECTICUT MICHAEL SZURA

Signature MICHAEL SZURA Date
LICENSED LANDSCAPE ARCHITECT
STATE LIC. No. 1339

LANGAN
Langan Engineering and Environmental Services, Inc.
555 Long Wharf Drive
New Haven, CT 06511
T: 203.562.5771 F: 203.789.6142 www.langan.com

Project
NORTH BLOOMFIELD COMMERCE CENTER
116 WEST DUDLEY TOWN ROAD
MAP 16, LOT 43
BLOOMFIELD CONNECTICUT

APPLICANT/DEVELOPER:
NORTHPOINT DEVELOPMENT
3315 NORTH OAK TRAFFICWAY
KANSAS CITY, MO 64116

SUBMISSION PURPOSE: INLAND WETLANDS AND WATERCOURSES COMMISSION PERMIT APPLICATION

Drawing Title
PLANTING DETAILS II

Project No. 140255601
Date 12/08/2022
Drawn By AC
Checked By JA
Drawing No. LP502

LANGAN
Project No. 140255601

© 2022 Langan